MobileView

MobileView 3012 Series Installation Manual

P/N 1079410 • REV A • ISS 28APR14

FCC compliance

This equipment has been tested and found to comply with the limits for a Class A digital device, pursuant to part 15 of the FCC Rules. These limits are designed to provide reasonable protection against harmful interference when the equipment is operated in a commercial environment. This equipment generates, uses, and can radiate radio frequency energy and, if not installed and used in accordance with the instruction manual, may cause harmful interference to radio communications.

You are cautioned that any changes or modifications not expressly approved by the party responsible for compliance could void the user's authority to operate the equipment.

Contact information

http://www.mobileviewvideo.com

Contact Technical Support: Monday–Friday 6 am – 7 pm EST
Phone: 1.844.899.7366 Email: service@seon.com

Content

Chapter 1
Introduction

Summary

This chapter provides an overview of the MobileView 3012 Series, including minimum hardware and software requirements, and the steps you need to perform before installing, configuring, and using the MobileView 3012 Series.

Content

About this manual

The *MobileView 3012 Series Installation Manual* includes an overview of the product and detailed instructions explaining:

- How to wire the MobileView system
- How to configure and commission the system
- How to test the system

There is also information describing how to contact technical support if you have questions or concerns. To use this document effectively, you should have a basic knowledge of the following:

- CCTV systems and components
- Electrical wiring
- Windows XP operating system
- TCP/IP networking
- Windows Remote Desktop protocol and file sharing

Read these instructions and all related documentation before installing or operating this product. The most current versions of this and related documentation are available from technical support. Refer to “Contacting us” on page 94 for instructions on contacting technical support.

Note: A qualified service person, complying with all applicable codes, should perform all required hardware installation.

Product overview

Full featured video surveillance on the move:

The MobileView 3012 Series digital video recorder (DVR), with H.264 compression technology for enhanced recording capacity and improved network image transmission speed with high image quality, delivers real-time video and audio recording on all channels (240fps @ 4CIF resolution, frame rate and resolution independently configurable for each camera) along with comprehensive features including hot swap hard drive, embedded 3-axis g-sensor, GPS receiver interface, be 802.11 b/g/n WiFi, individual camera power outputs, remote control capability and shock/vibration resistant locking Molex connectors make this DVR the best choice for your portable and mobile recording applications.

The DVR provides multiple interfaces including 3 USB ports, RS-485, RS-232, GPS port, wired and WiFi Ethernet, 12 alarm inputs and 2 alarm outputs. The new easy to read graphical user interface is specially designed for use with portable small-screen monitors. The power supply in the MobileView 3012 Series provides surge protection, voltage regulation, and programmable delay power on/off for the DVR.

A MobileView 3012 Series system consists of software applications and the required equipment. The system may also include the accessories shown in Figure 1.

Figure 1: Typical MobileView 3012 Series system layout

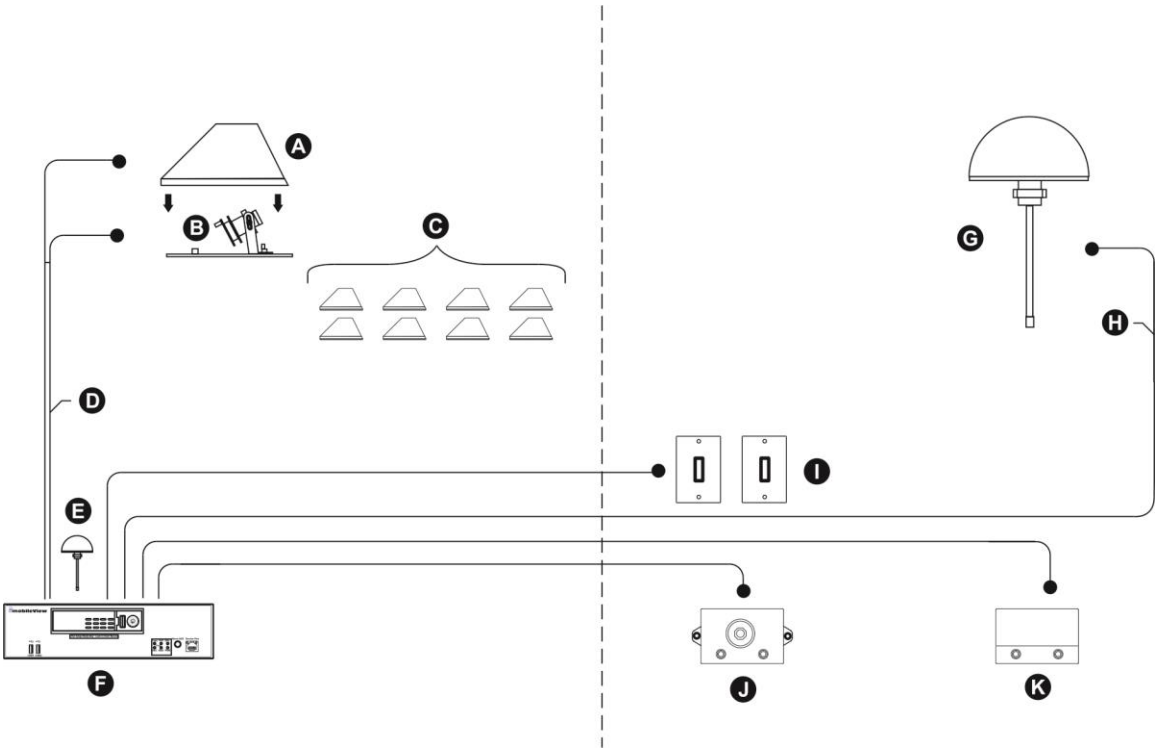

A. Aluminum Housing
B. Camera
C. Up to 12 Cameras per system
D. RG179 Coaxial Cable
E. GPS Antenna
F. DVR Assembly
G. Wireless Antenna
H. Wireless Anternna Cable
I. Microphones
J. Tag switch
K. Accelerometer

The central component of the MobileView 3012 Series system is a high-quality DVR, which records images from eight cameras (monochrome or color) depending on model, dual-channel audio and other information such as the time, date, and vehicle number. You can adjust image storage capacity by changing your recording speed, selected resolution, and drive size.

The DVR begins capturing video within 90 seconds of receiving the vehicle's ignition signal. It continues to capture data while that signal is present and for a programmable shutdown delay period after the vehicle ignition signal expires. Surveillance and event-based video data is stored on a mobile-rated, removable hard disk drive caddy. When available storage capacity is full, the DVR automatically overwrites the oldest data with new data in a FIFO (first-in, first-out) fashion.

Note: Most MobileView products are not supplied with mounting hardware. Exceptions are noted in the appropriate sections of the manual.

The MobileView 3012 Series solution uses Video Manager software for the review of surveillance and event-based video stored on the DVR. The Video Manager is also used to configure MobileView operating parameters. The Fleet Manager application adds remote management tools to automate video download, device health checking, e-mail notifications, and more.

Retrieving and viewing images

The DVR stores the captured digital images as monochrome or color files, which you can download to a computer using the MobileView Video Manager software. The DVR connects to a viewing station through a wired or wireless Ethernet connection. The viewing station is generally a laptop or desktop PC running the Windows XP (or Vista) Professional operating system. When you are connected to the viewing station, you can view or observe live video and log data stored on the DVR. You can also transfer recorded data to long-term storage media such as DAT tapes or recordable CDs.

Note: An Ethernet crossover cable is required to connect the DVR to the viewing station via a wired Ethernet connection.

Product contents

The MobileView 3012 Series system consists of a digital video recorder (DVR) assembly that includes:

- Digital Video Recorder x1
- HDD Tray x 1
- HDD Fixing Bracket x 1 set
- Screws x 1 pack
- Antenna x 1 set
- Battery x 2
- Camera Power cable x 3
- Video & Audio cable x 3
- Alarm cable x 1

- Alarm Output cable x 1
- RS232/RS485 cable x 1
- GPS cable x 1
- DVR power cord x 1

A MobileView system can contain one or more of these accessories:

- Camera (8 maximum)
- Tag switch
- Impact sensor
- Microphones
- Accelerometer
- GPS antenna
- Wireless bridge
- LCD display monitor

Inspect the package and contents for visible damage. If any components are damaged or missing, do not use the unit. Contact the supplier immediately. If you need to return the unit, you must ship it in the original box

System requirements

You need a PC to view the images and to interact with the system. The minimum PC requirements are:

- Windows XP OS with SP2 and all current updates (or Vista)
- .NET Framework SP1.1 and 2.0
- Intel Core 2 dual 2.4 GHz
- Intel 945 chipset recommended
- 2 GB recommended
- SVGA monitor (1024 x 768 pixel resolution)
- NVIDIA 8XXX series GPU, 9XXX series recommended
- 160 GB hard disk space (360 GB recommended)
- DVD-RW drive
- Ethernet crossover cable

Other requirements

Make sure you have access to the tools you will need to complete the installation:

- BNC crimper
- Cat 5 Ethernet crossover cable
- Cat 5 Ethernet patch cable
- Molex pin crimper
- Phillips and flathead screwdrivers
- Riv-nut gun

- Drill and bits, up to 5/8 in.
- Electrical connections (ends, lugs,etc.)
- Electrical tape
- Electrical voltmeter
- Extension cords
- General tools
- Heat shrink
- Hole saws, up to 1–1/8 in.
- Laptop/viewing station
- Thread-locking compound
- Socket set, up to 5/8 in.
- Solder gun with solder
- Spare BNCs
- Wrenches, up to 5/8 in.
- Spare Molex pins
- Spare terminal blocks
- Tie wraps (8 in.)
- Torx bit, secured #10
- Wire snake
- Wire strippers

References and related documents

For information related to to *MobileView 3012 Series* and its operation, consult the following documents:

- 1079510A MobiileView 3012 Series Installation Manual
- 1079511A Mobileview 3012 Docking Station User Manual
- 1072546A Mobileview 3012 Navigator User Manual

You may also want to see the documentation for your cameras and other products for installation and setup information.

Chapter 2
Camera installation

Summary

This chapter provides information on determining a system layout and installing the hardware components.

Content

System layout

Camera layout and fields of view vary based on several factors including vehicle seating arrangements, partition walls, door location, and customer guidelines. It is the responsibility of the installer to ensure that these factors are adequately considered before installation begins.

Figure 2 below shows a typical, eight-camera layout generally used on a 40’ transit bus. While most areas of the vehicle are covered when cameras are located in this manner, this illustration is provided as a guide and not a rule for actual camera placement. In all new installations, you should obtain customer acceptance of camera location and fields of view as part of installation planning.

Figure 2: Typical eight-camera setup with fields of view shown

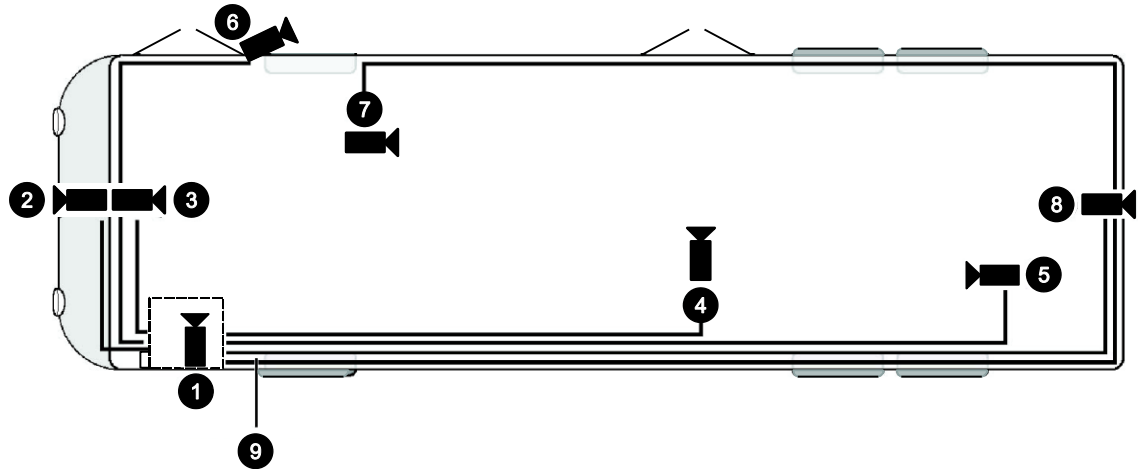

1. Front door camera. Front of the bus over the driver’s head, looking at the front passenger entry.
2. Forward-facing camera. Front of the bus, looking in front of the bus.
3. Front-to-rear camera. Front of the bus, looking down the center aisle to the back.
4. Rear exit camera. Across from the back door, looking at the back doorway.
5. Rear-to-front camera. Back of the bus, looking up the aisle to the front of the bus.
6. SideEye side camera. Exterior of the bus by the front door, looking toward the back of the bus.
7. Center-to-rear camera. Between the front and back door, looking down the center aisle to the back of the bus.
8. SideEye rear camera. Back of the bus, looking behind the bus.

Note: Cameras 6 and 8 in Figure 2 above are MobileView SideEye cameras. Camera 2 is a MobileView forward-facing camera. For installation of these cameras, see their respective manuals, shown in “References and related documents” on page 6.

Camera cable guidelines

When installing camera cable, follow these guidelines:

- Avoid excessive lengths of cable at the control and device end. Pull back excess cable to a duct area where it can be folded and secured. Leave a service loop as directed for specific devices.
- Cables should not come into contact with bare metal edges, light ballasts, or magnetic speaker coils. If ballasts and speaker coils cannot be avoided, cross them perpendicularly.
- Do not tighten cables that are secured with cable-ties to the extent that the cable is compressed or damaged. Do not crimp, crush, or severely bend the cables.
- When passing cables through tapping plates or metal sidewalls of the vehicle, if possible, insert grommets in the holes to protect the cables. If it is not possible, make sure that the protective outer CL2 jacket is maintained when passing the cables through the holes.
- When pulling cable through the conduit, do not jerk or overpull the cables. These actions will stretch and damage the cable. If you must pull cables through vehicle walls with limited access or conduit, attach a pull line to the cable jacket, not to the connector, and gently pull the cable through the appropriate routing paths.
- Route cables from each camera location to the DVR location as determined by your specific system layout. Figure 3 on page 10 shows an example of cabling layout.
- After reaching camera locations, leave enough cable for a 12 to 18 in. (152 mm) service loop at each location.

Figure 3: Typical eight-camera cabling layout

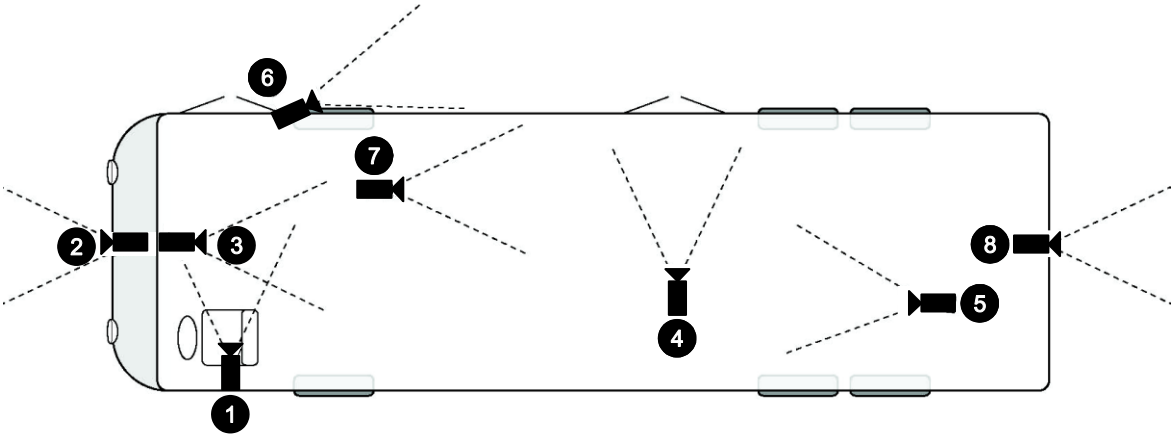

1. Front door camera
2. Forward-facing camera
3. Front-to-rear camera
4. Rear exit camera
5. Rear-to-front camera
6. SideEye side camera
7. Center-to-rear camera
8. SideEye rear camera
9. DVR location

Installing camera assemblies

The MobileView system supports up to eight cameras (color and monochrome). Cameras supported by the MobileView system provide a 1.0 Vp-p composite analog video signal, at 75 Ω (CCTV standard).

Note: In some installations, it is necessary to use a metal tapping plate behind the mounting surface. If you are using a tapping plate, prepare it the same way as the mounting surface. Drill a cable entry hole and mounting holes in the appropriate locations.

Mini-Dome cameras

Location and Preparation

The mini-dome camera is designed for interior use only. Choose a protected location inside the vehicle that will deliver the desired image.

Before beginning, confirm you have the following parts required for installation:

- MobileView™ Mini-Dome Camera
- Three (3) machine screws with red nylon washers
- Three (3) flat-head sheet-metal screws with black nylon washers (optional)
- Hex wrench

Mounting the Camera

1. Using the provided hex wrench, loosen the set screw on the side of the camera just enough to unscrew the lens cover. See Figure 4.

Figure 4: Loosen set screw

2. Using the camera mounting base as a guide, mark the center of the mounting base and the position of the three mounting screws on the mounting surface as shown in Figure 5.

Figure 5: Mark the mounting holes and center

3. Cut the center hole for the video/power cable connectors (typically 9/16” or more) as shown in Figure 6.

Figure 6: Cut the cable hole

4. Drill the three mounting holes as shown in Figure 7 using a bit sized according to the mounting hardware you will use.

Figure 7: Drill the mounting holes

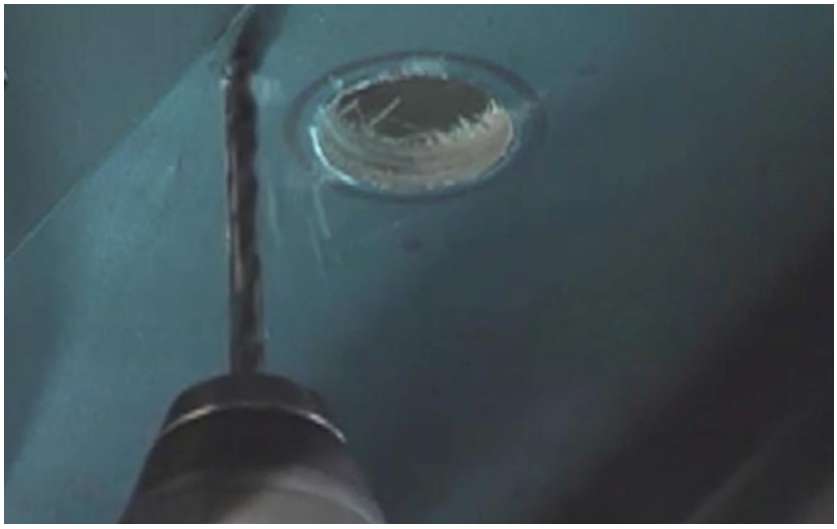

5. Use a deburring tool to eliminate sharp edges from the center hole to prevent video cable damage.
6. If using rivnuts, install stainless steel rivnuts as shown in Figure 8.

Figure 8: Install stainless steel rivnuts

7. If using the flat head sheet metal screws or other hardware, install hardware to secure camera base to surface.

   Note: Application of blue Loctite is recommended on the camera base mounting screws to prevent loosening.

Figure 9: Install the camera base

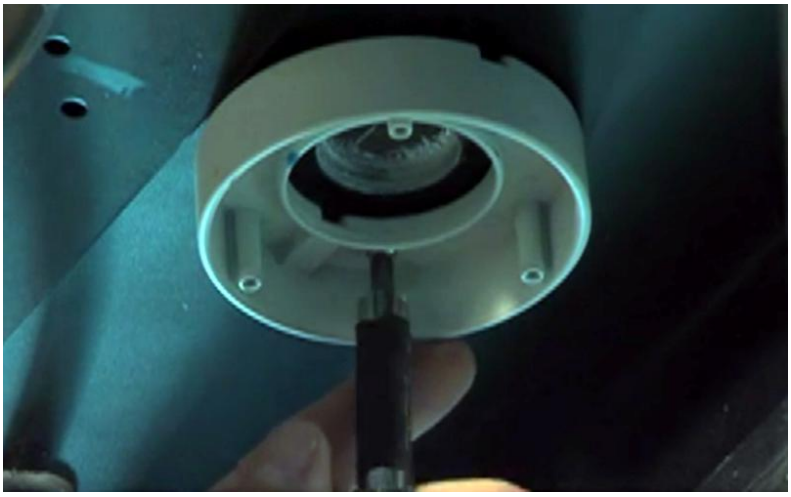

8. Remove the protective covering from the camera, and remove the dome from the camera plate by unscrewing counter-clockwise.
9. Feed the camera cable harness through the center hole, and pull gently until the camera is against the base.
   The cable will be accessed from inside the vehicle through an appropriate access panel for later connection to the DVR. When the camera pigtail BNC is connected to the video cable, wrap the BNC connector with electrical tape.

10. Use the three machine screws with red nylon washers to attach the camera to the base. Hand tighten the screws until snug.

Figure 10: Remove the cover

Adjusting the lens

Once the camera is mounted, it is adjustable in three dimensions. The camera module is a ball in a cup.

The ball will rotate in any direction in the cup for view adjustment: up, down, left, right, clockwise, counter-clockwise, etc. However, large adjustments can create internal wire tension. Therefore, we recommend positioning the camera as close as possible to the correct orientation during installation so that you do not need to make adjustments that rotate the ball more than 45 degrees clockwise or counter-clockwise.

1. Connect appropriate power and a video monitor to the camera, or connect the camera to the DVR, to view the image and adjust the angle of view and focus of the lens to ensure the desired image.
2. Two screws, one on each side of the camera, secure the camera lens cup and also lock the camera lens ball in place after adjustment. Loosen these two screws slightly (do not remove the screws) and rotate the camera as necessary for final view alignment. Tighten the screws when finished with the adjustment.

Figure 11: Loosen the two screws just enough to adjust the view

Installing the cover

1. Install the camera cover by tightening in a clockwise direction.

Figure 12: Replace the cover and tighten the set screw

2. Tighten the set screw in the side of the camera (shown in Figure 4) to secure the cover in place.

Troubleshooting

There is no image or it is intermittent.

- Check video cable connections. The BNC connector may be shorted or the wires pinched.

- Ensure that the BNC connector inside the connection box is wrapped with electrical tape to prevent metal-to-metal contact with the camera housing.
- Ensure that the pigtail wires coming from the camera are not pinched.

Image is upside down or misaligned on the monitor.

- The camera is not properly aligned. Adjust the camera for the correct view.

Mounting bracket template

Use the mounting bracket template to mark the positions of the mounting and cable entry holes on the mounting surface.

Figure 13: Mounting holes

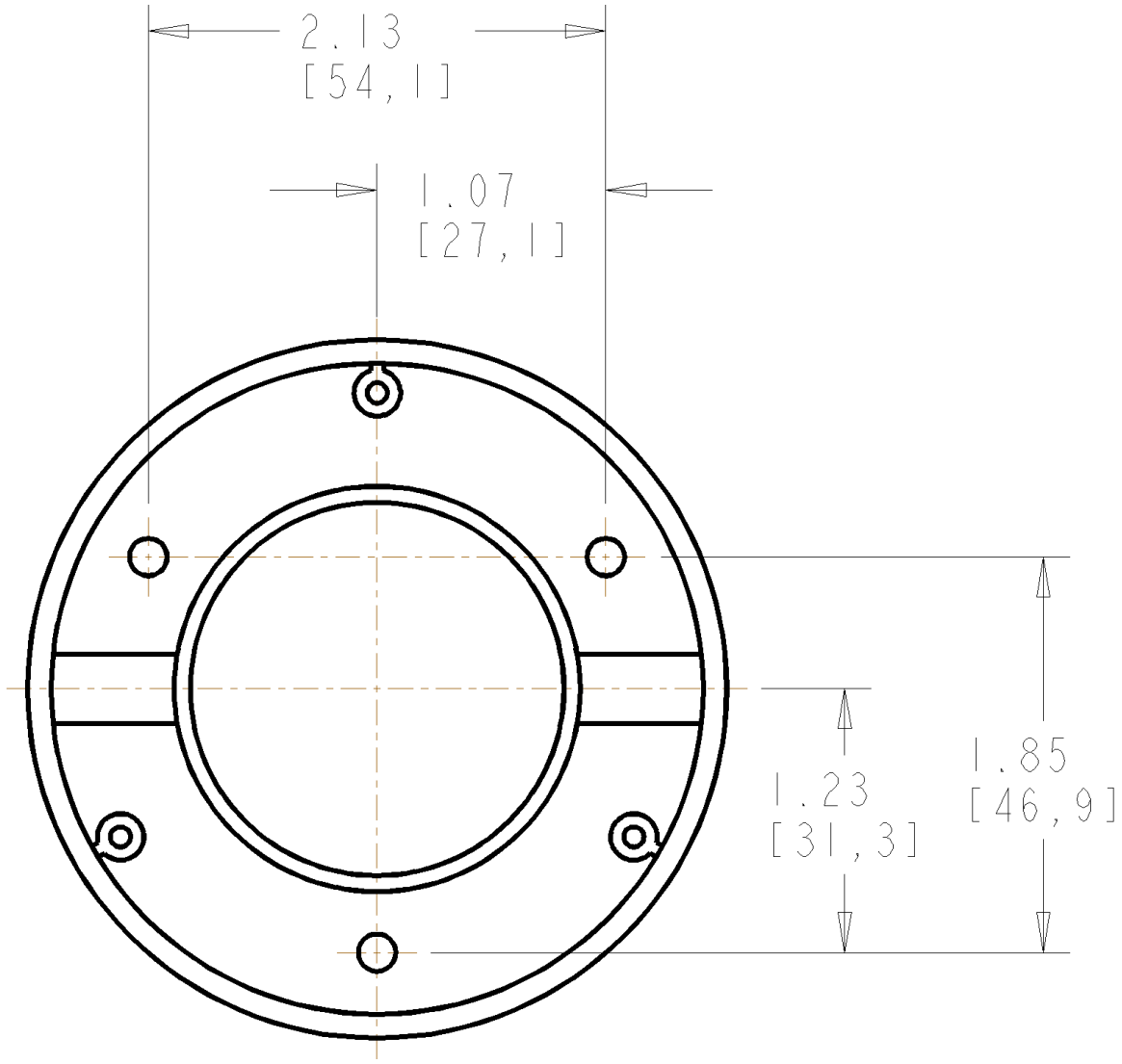

Exterior Wedge Cameras

Introduction

The MobileView™ Exterior Wedge Camera Installation Manual includes instructions for installation of the camera on the exterior surface of a bus or similar vehicle. Read through these instructions before installation.

To use this document, you must have the following minimum qualifications:

- A basic knowledge of CCTV systems and components; and
- A basic knowledge of electrical wiring and low- voltage electrical hookups.

Installation

Before beginning, confirm you have all contents required:

- MobileView™ Exterior Wedge Camera
- Required screws and washers
- Desiccant pack with gummed tape
- Rubber gasket
- Security Torx wrench (6 points) to remove housing (included with each camera).

The Exterior Wedge Camera has four part numbers depending on the desired installation location and need for internal heater.

Mounting the Camera

1. Using the Torx wrench provided, remove the 4 screws to separate camera's base from its cover as shown in Figure 14.

Figure 14: Remove the cover

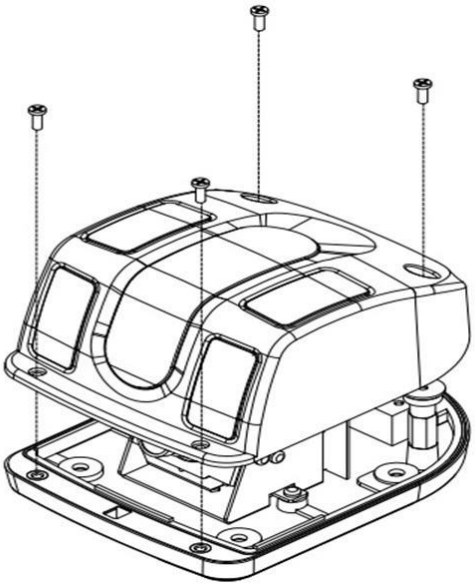

Caution: The four special Torx screws can fall out of the housing and are easy to lose. Do not drop them. Do not attempt to completely pull off the cover, as the LED and light sensor wires are attached as shown in Figure 15.

Figure 15: Carefully lift cover (do not remove or strain wires)

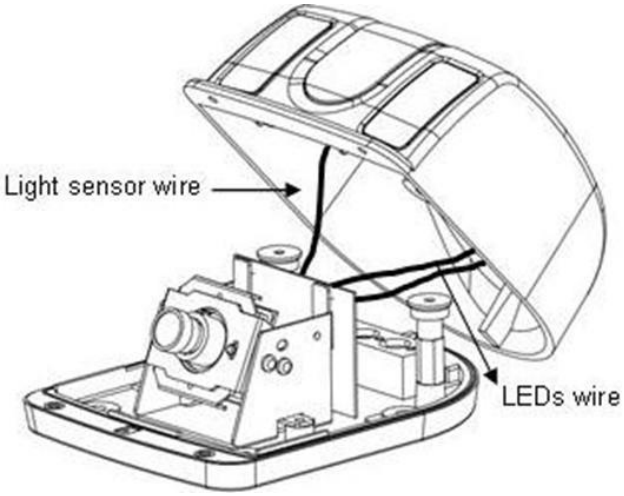

2. Using the rubber base gasket or the camera base, mark the position of the mounting and cable entry holes on the mounting surface as shown in Figure 16.

Figure 16: Mark the mounting holes and cable entry hole positions

Tip: Multiple installations may be made more efficient and consistent if you create a template to mark the mounting surface using plexiglass or similar material. Use the provided mounting bracket template or the rubber base gasket to create the template.

3. Cut the clearance hole for the video/power cable connectors (typically 9/16” to 1”) using a drill bit or hole saw as shown in Figure 17.
4. Drill the four mounting holes with an appropriate bit for the metal or fiberglass vehicle surface.
5. Use appropriate hardware (See Figure 17) to secure camera tightly to the surface.
   - Install stainless steel rivnuts in any holes through fiberglass.
   - Use stainless steel self-tapping screws in any holes through metal.
   - Screws must be tight enough to compress the rubber gasket.

Note: In some installations, it may be necessary to use a backing plate for stability.

Tip: Use of stainless steel rivnuts in all holes, even metal when possible, may provide more leak resistance and consistency. Self-tapping screws should be sealed with caulk and tightened as much as the rivnut screws.

Figure 17: Cut and drill holes and install rivnuts in fiberglass

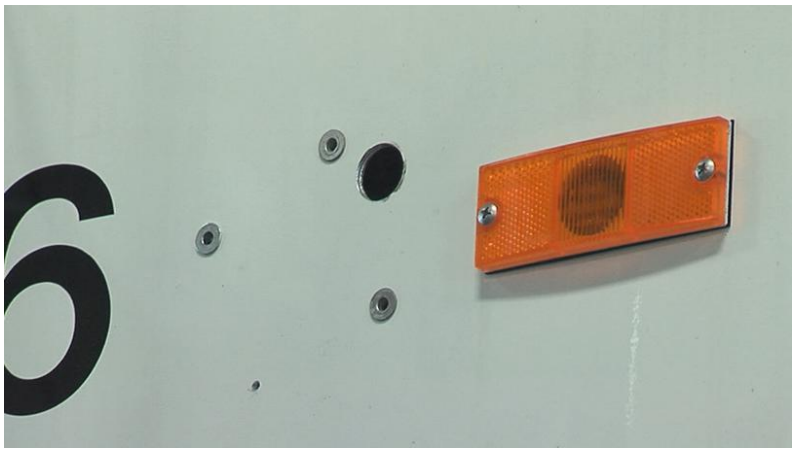

6. Feed the video and power cable assembly through the cable hole until the camera is close enough to be mounted. See Figure 18.
   The cable will be accessed from inside the vehicle through an appropriate access panel for later connection to the DVR. When the camera pigtail BNC is connected to the video cable, wrap the BNC connector with electrical tape.

Figure 18: Feed the cables through the cable hole

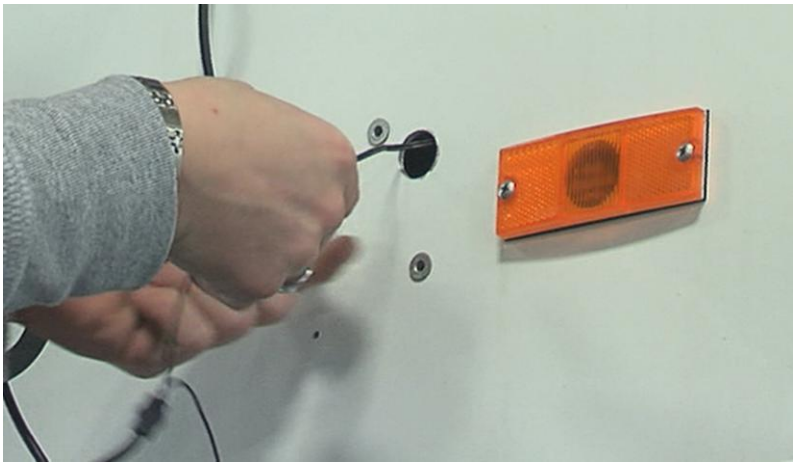

7. Place the camera and rubber gasket to align the mounting holes. **Seal all mounting holes so that no moisture can leak into the mounting surface**.
8. Using the appropriate hardware to secure the camera base to the surface, and make sure to install the rubber base gasket between the camera base and the surface. All four screws must be tight enough to compress the rubber gasket to seal out moisture. See Figure 19.

Figure 19: Secure the camera compressing the rubber gasket

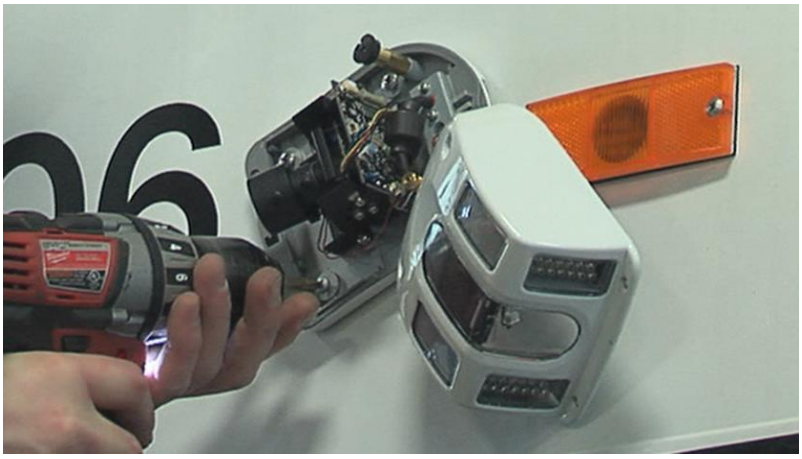

Adjusting the Lens

To adjust the angle of view and focus of the lens to ensure the desired image:

1. Connect the camera to the DVR, or use a portable video monitor.
2. Loosen the angle-of-view and focus-adjustment screws as shown in Figure 20.

Figure 20: Tighten the lens adjustment screws after adjusting image

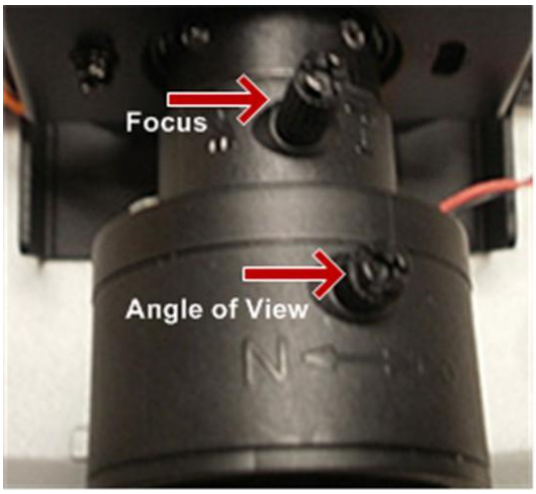

3. After adjusting the lens to achieve the desired image, tighten the angle of view and focus adjustment screws before attaching the cover.

Attaching the Cover and Sealing

Note: One of your primary installation considerations is to create a water tight seal. This is accomplished by caulking the mounting screw holes, tightening the mounting screws tight enough to compress the rubber gasket, using the small rubber plug to help seal the hole around the cable, and accurately caulking the perimeter after mounting, as shown in Figure 23 and Figure 24.

1. Attach a desiccant pack to inside of the camera housing as shown in Figure 21. The desiccant pack has gummed tape to attach it to the lower cavity on the upper cover. Desiccant absorbs moisture inside the case to prevent the camera from fogging up.

Figure 21: Install the dessicant

2. Reattach the cover as shown in Figure 22 with the four screws removed during the Step shown in figure 14.

Figure 22: Reattach the cover

3. Place the cover onto the base, making sure the gasket lies flat between the base and cover.
4. Caulk the perimeter of the mounting base with a generous amount of professional grade exterior caulking such as Sikaflex or other similar material.

Figure 23: Caulk the perimeter, all but the lower corner

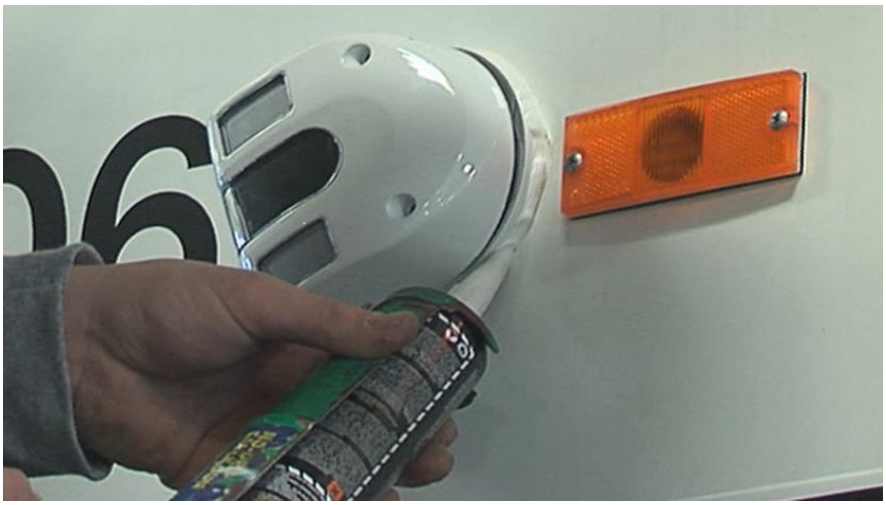

5. Smooth the entire perimeter with a finger or caulk smoothing tool as shown in Figure 24. Remove any excess.

Figure 24: Smooth the caulk

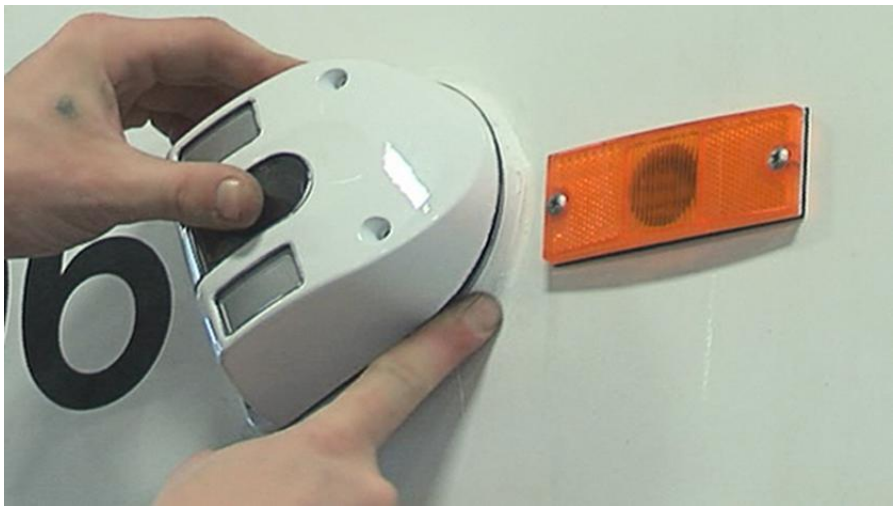

Troubleshooting

There is no image or it is intermittent.

- Check video cable connections. The BNC connector may be shorted or the wires pinched.
- Ensure that the BNC connector inside the connection box is wrapped with electrical tape to prevent metal-to-metal contact with the camera housing.
- Ensure that the pigtail wires coming from the camera are not pinched.

Image is upside down or misaligned on the monitor.

- Make sure the correct camera was installed (Curbside or Streetside). To align the camera, remove the cover and refer to section above: Adjusting the Lens.

Mounting bracket template

Use the mounting bracket template on the next page to mark the positiions of the mounting and cable entry holes on the mounting surface.

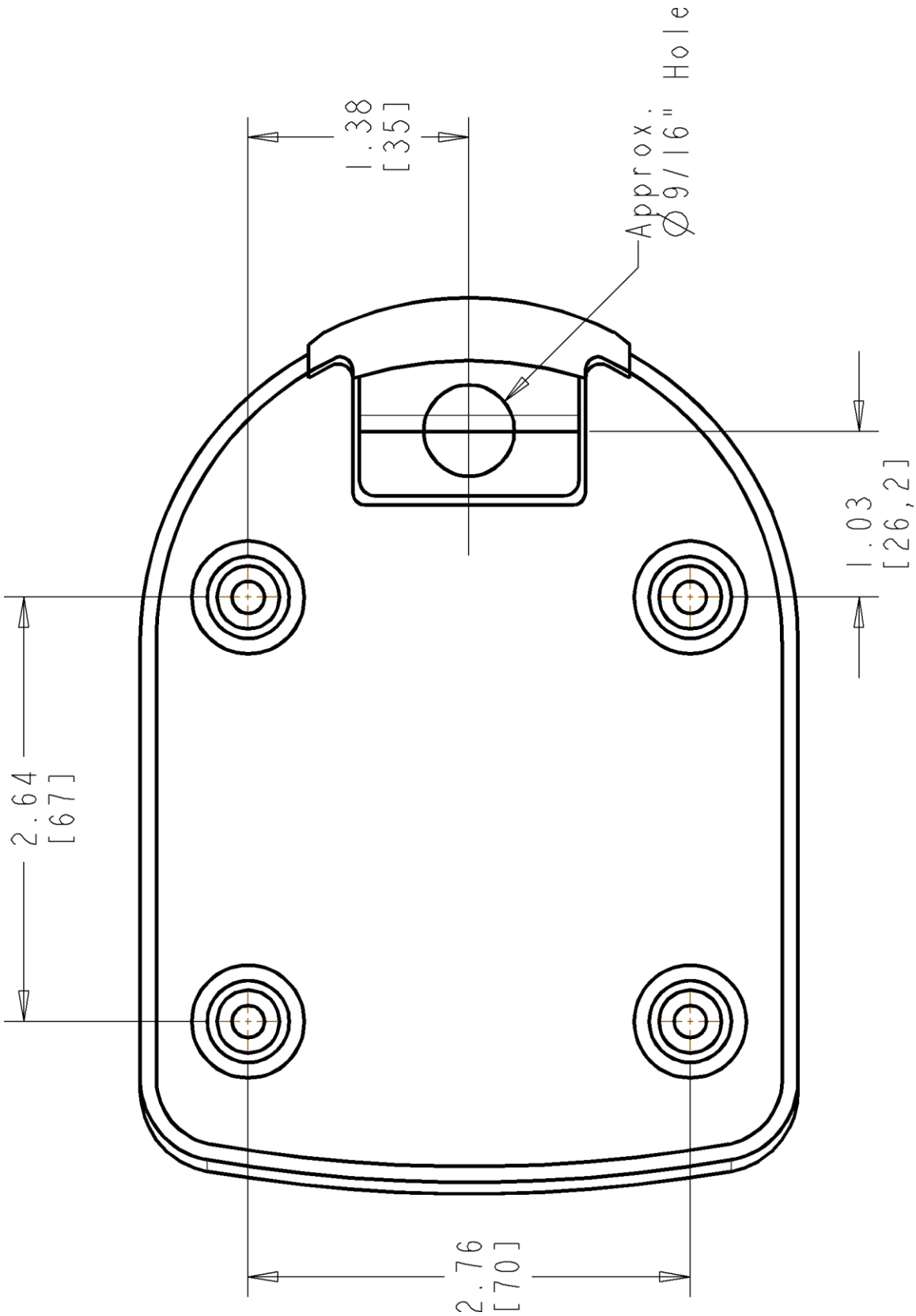
1.38
[35]
Approx.
Ø9/16" Hole
1.03
[26,2]
2.64
[67]
2.76
[70]

Chapter 3
DVR installation

Summary

This chapter provides information on installing and wiring the MobileView DVR.

Content

Installation overview

The Mobileview 3012 Series DVR is designed specifically for installation on public transit vehicles. This logistically assumes that certain mounting and wiring limitations common to that environment exist. The installation instructions provided in this chapter are tailored to that expectation.

Figure 25: Components of the DVR assembly

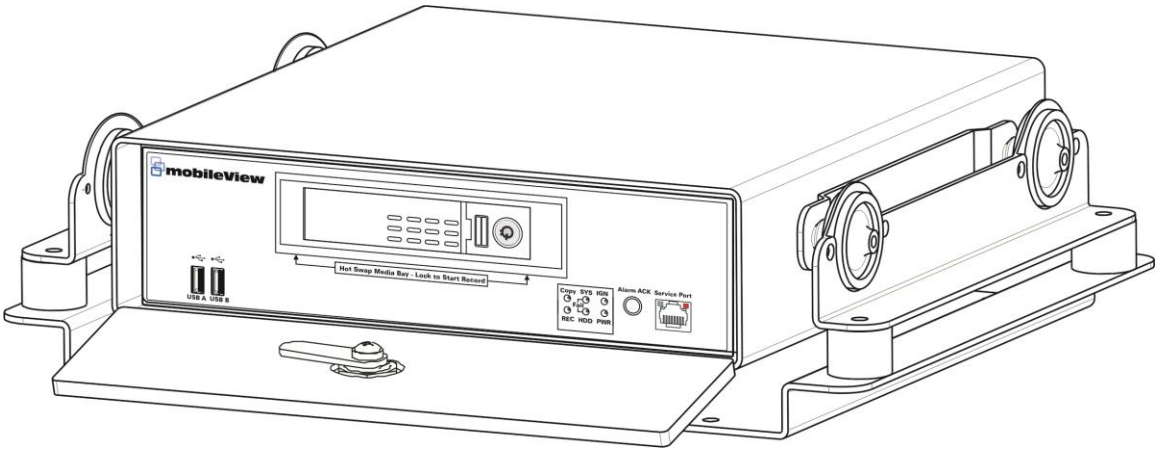

Locating the DVR

A mobile DVR is normally mounted within the vehicle’s electronics enclosure. Such enclosures vary in size and location, depending on the vehicle make and model. In general, the electronics enclosure provides adequate space for the DVR. For most vehicles, this is located behind the driver, and is typically lockable and climate-controlled. When deciding where to place the DVR, ensure that the space adequately protects against liquid and foreign material intrusion, and provides sufficient ventilation to maintain a 0 to 55°C operating temperature range.

Mounting the DVR

The Mobileview 3012 Series DVR is designed to resist shock and vibration forces commonly observed on a transit vehicle. Resistance to specified levels is only obtained when the DVR is secured to a stationary (with respect to the vehicle), vibration-resistant, and horizontal surface, as shown in Figure 26 on page 30.

Mounting the DVR in a way that does not meet these requirements may result in undesired performance.

To mount the DVR housing:

1. On a flat, stationary, and vibration-resistant surface, use the DVR mounting plate as a template to mark and drill four mounting holes.

   See Appendix B “Templates and dimensions” on page 105 for the templates and dimensions and details on DVR mounting plate bolthole patterns.

2. Using bolts, locking washers, and nuts, mount the DVR base plate to the vehicle surface (see Figure 26 on page 30).

   To resist vibration, we recommend using nuts with a thread locking compound or a self-locking nylon insert. Failure to use such devices may result in insecure mounting and damage to the unit.

Figure 26: Mounting the DVR

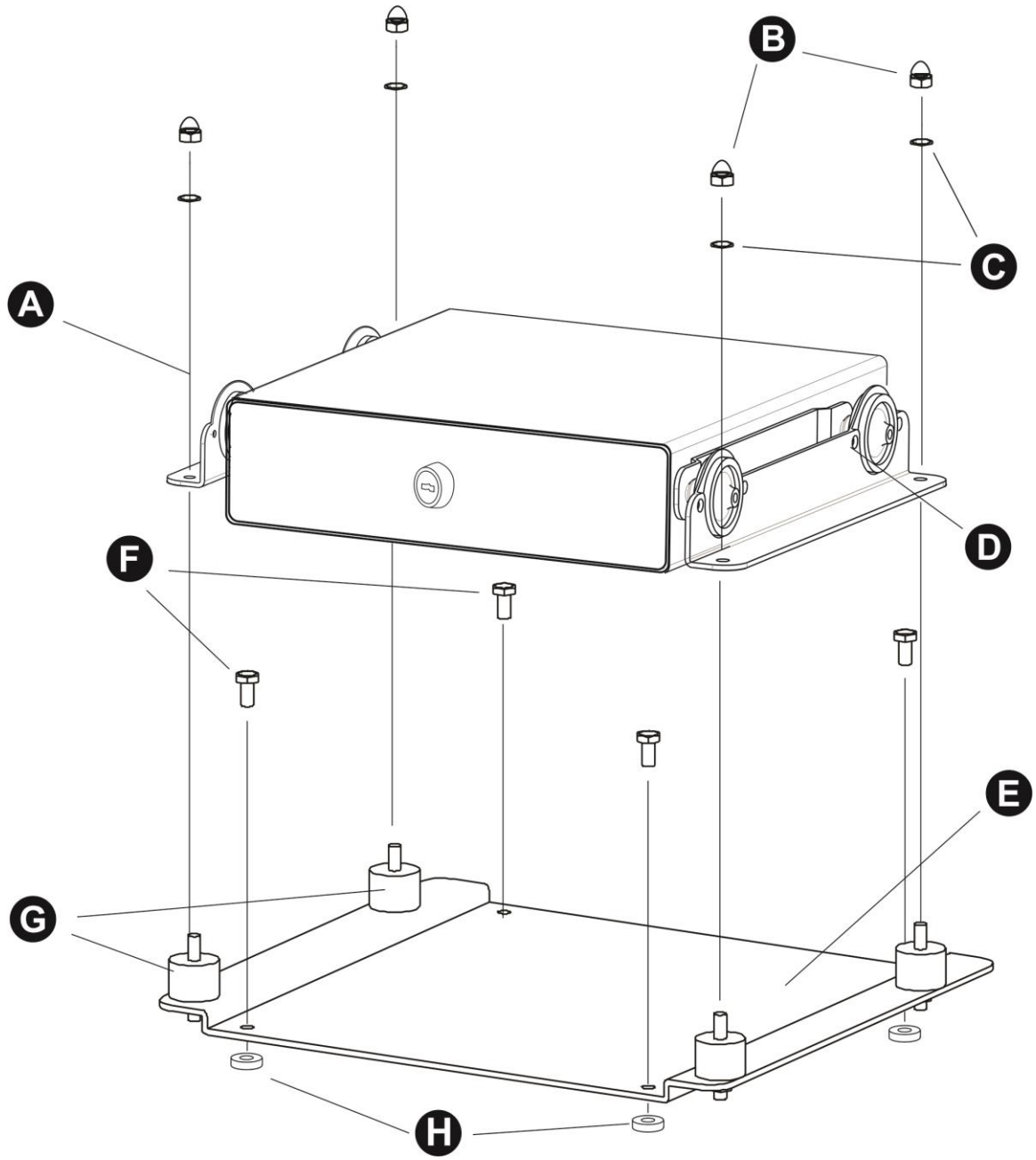

See figure 26 and perform the following:

1) Remove the four acorn nuts (B) and locking washers (C) from the top of the DVR outer housing (A).

2) Remove the DVR housing. (Do not remove the vibration isolators (G) or the bolts and nuts holding them in place.)

3) Mount the mounting plate (E) to the vehicle using four nuts and bolts (not provided) (1/4-20-inch bolts (F) are recommended). 1/4-inch spacers (H) are provided and should be used beneath the mounting plate, if needed to allow the door to fully open.

4) Place the DVR outer housing back onto the mounting plate by lining up the holes in the mounting brackets (D) with the bolts in the vibration isolators.

5) Reattach the four acorn nuts and locking washers.

Front Panel

Take a moment to learn where the connections are as the remainder of the manual will refer to them often.

Figure 27: MobileView 3012 front panel

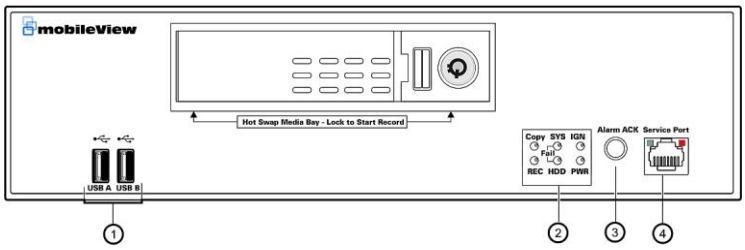

1. **USB 2.0:** 2 ports for connecting USB-Flash-Drive to upload/download configuration and update system firmware.
2. **System Status LEDs:** In Normal Operation: The order of the LEDs will illuminate as follows: PWR, IGN, then REC. These are the three lights that should be present on a DVR that does not require maintenance.
    - **System LED:** The SYS light means the DVR is experiencing a system fault. Possible causes are: Fan Failed, Over Temperature, Configuration is set for System Faults. If the SYS light turns on the RED LED on the Tag switch should also illuminate. Verify System alarms in Web Browser. Login to the web browser on the vehicle. From the main landing page navigate to Notifications > System Alarms.
    - **HDD LED:** The HDD light should be off by default indicating that the system HDD is present and recoding as expected. The HDD light will turn on if the hard drive caddy is unlocked and or removed.
    - **Copy LED:** Will turn on only when when you are copying data to USB (memory stick). Examples include: saving a configuration file or saving a log file.

- **IGN LED:** When power is present (PWR) and ignition is turned on after the delay the IGN light should illuminate. In most installation the delay is set to 5 seconds.
- **Record LED:** The REC light should turn on anytime the DVR is recording video. If the REC light turns off the system is not recording.
- **Power LED:** If the unit has main power, the PWR led should be on. The PWR LED should be on at all times unless inline power to the vehicle has been disconnected. There should be no other LED lights on the DVR until Ignition is turned off.

3. **Alarm Acknowledge Button:** Press to silence alarms.

4, **Service Port:** RJ-45 network connection 10/100Mbps Ethernet. There are two LEDs on the LAN jack; Green LED means network is connected, amber LED flickers when data is being exchanged.

Rear Panel Connections

During initial setup you will be connecting your DVR to multiple input and output devices. This is done through the rear panel.

Figure 28: MobileView 3012 rear panel connections

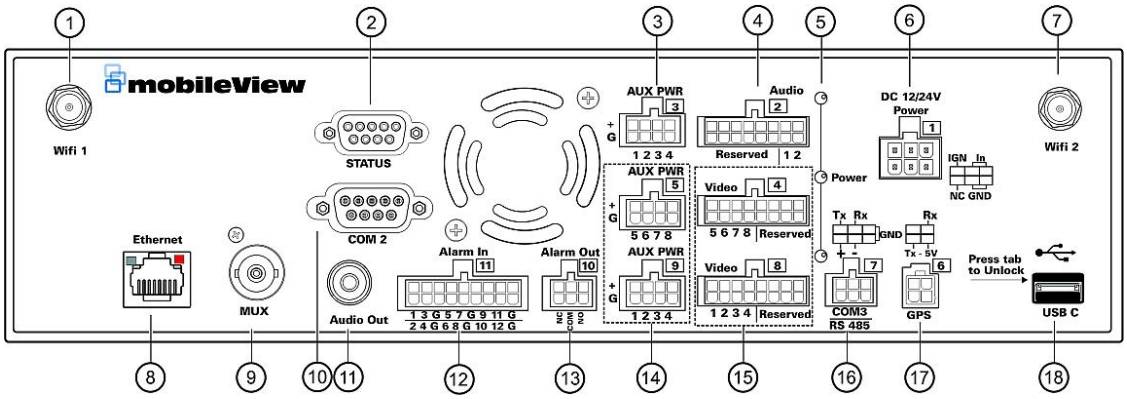

1. **Wifi 1:** Connection of the antenna. **802.11 b/g Wifi.**
2. **Status Port:** Not Used
3. **Auxiliary Power Connector:** For Audio
4. **Audio Input:** Connect line level output of an audio preamplifier to the audio input connection corresponding to the appropriate camera.
5. **Power LEDs:** Shows the status of the Audio and Video power
6. **Power Input/Ignition Control In:** This 6-pin connector includes 4 pins for power input, one pin for ignition control, and one unused pin. Both input power and ignition may connect to either a 12VDC or 24VDC nominal power source.

   PIN 1: 12VDC or 24VDC (+)

   PIN 2: 12VDC or 24VDC (+)

   PIN 3: Ignition Input

   PIN 4: Electrical Return (GND)

   PIN 5: Electrical Return (GND)

   PIN 6: Not used
7. **Wifi 2:** Connection of the antenna. **802.11 b/g Wifi.**
8. **Ethernet Port:** for connecting to the Network
9. **MUX (Main Monitor Out):** Main monitor for live viewing.
10. **COM 2 (RS232 socket):** Connect this connector to RS232 compatible device.

11. **Audio Out:** Connect to the line level input of an audio amplifier.
12. **Alarm Input:** Connect up to 12 alarm inputs, selectable between N.O. / N.C. contacts.
13. **Alarm Output:** N.C or N.O type alarm out (form “C”).
14. **Auxiliary Power Connector:** For Video
15. **Video (Camera Power Outputs):** MobileView 3012 can provide power source to cameras, connect camera power to this output by using the camera power cable. For the first 4 CH, the power source used is 300mA x 12VDC.
16. **COM3 (RS485) port:** Connect this connector to RS485 compatible device.
17. **GPS Data Input:** Connect this connector to GPS receiver via GPS cable.
18. **USB C port:** Port reserved for expansion devices.

Connecting the DVR

The subsequent sections provide information needed to attach field wires directly to the J connector. The equivalent harness connection information is also provided. In general, harnesses provide an easy means of connecting and disconnecting the DVR from the vehicle for service, maintenance, or repair.

All connectors are equipped with dual, vibration-resistant, screw-down retainers. The connector must be fully seated and each screw-down tightly engaged to ensure the connector remains in place during normal operation.

WARNING: It is the installer’s responsibility to ensure all power is off before connections are made. We recommend checking all power connections for shorts and grounds before applying power. Failure to follow this recommendation may result in damage to the vehicle or the DVR, as well as injury to the installation personnel.

Figure 29: P1 Power Connector

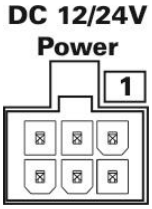

MV 3012 Plug 1: Power			
Pin Position	**Harness Wire Color**		**Pin Use**
1	Black		Return In
2	Black		Return In
3	--	--	Not Used
4	Red		Main Power In
5	Red		Main Power In
6	White		Ignition In

Figure 30: P2 Audio connector

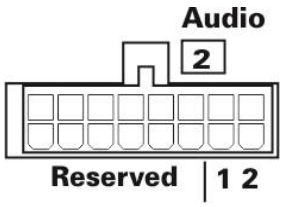

MV 3012 Plug 2. Audio			
Pin Position	**Harness Wire Color**		**Use**
1	Black		GND (AUD2 Return)
2	Black		GND (AUD1 Return)
3	--	--	Not Used
4	--	--	Not Used
5	--	--	Not Used
6	--	--	Not Used
7	--	--	Not Used
8	--	--	Not Used
9	Yellow		AUD2+
10	Brown		AUD1+
11	--	--	Not Used
12	--	--	Not Used
13	--	--	Not Used
14	--	--	Not Used
15	--	--	Not Used
16	--	--	Not Used

Figure 31: P3 AUX PWR connector

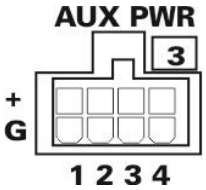

MV 3012 Plug 3			
Pin Position	**Harness Wire Color**		**Use**
1	Black		GND (Mic 2 PWR Return)
2	Black		GND (Mic 1 PWR Return)
3	Black		GND (Spare)
4	--	--	Not Used
5	Blue		12VDC+ (Mic 2 Power)
6	Blue		12VDC+ (Mic 1 Power)
7	Blue		12VDC+ (Status LED Power)
8	Blue		12VDC+ (Spare)

Figure 32: P4 Video connector

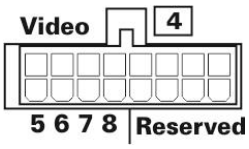

MV 3012 Plug 4 –Model 3008 Only			
DVR Pin Position	**Color**		**Use**
1	--	--	Not Used
2	--	--	Not Used
3	--	--	Not Used
4	--	--	Not Used
5	COAX	NA	Shield Channel 8 (S)
6	COAX	NA	Shield Channel 7 (S)
7	COAX	NA	Shield Channel 6 (S)
8	COAX	NA	Shield Channel 5 (S)
9	--	--	Not Used
10	--	--	Not Used
11	--	--	Not Used
12	--	--	Not Used
13	COAX	NA	Video Channel 8 (V)
14	COAX	NA	Video Channel 7 (V)
15	COAX	NA	Video Channel 6 (V)
16	COAX	NA	Video Channel 5 (V)

Figure 33: P4 AUX PWR connector

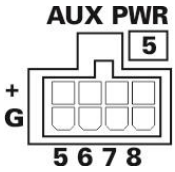

MV 3012 Plug 5 – MV 3008 Model Only			
Pin Position	**Color**		**Use**
1	Black		GND
2	Black		GND
3	Black		GND
4	Black		GND
5	Red		12V (+) / Camera Power
6	Red		12V (+) / Camera Power
7	Red		12V (+) / Camera Power
8	Red		12V (+) / Camera Power

Figure 34: MobileView 3012 front panel

MV 3012 Plug 6			
Pin Position	**Color**		**Use**
1	Orange		GPS 5V +
2	White		GPS TX (RS-232 Transmit)
3	Black		GPS RX (RS-232 Receive)
4	Green		Ground

Figure 35: MobileView 3012 front panel

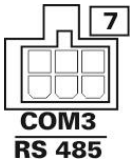

MV 3012 Plug 7			
Pin Position	**Harness Wire Color**		**Pin Use**
1	NA		RS-232 Ground
2	NA		RS-232 RX
3	NA		RS-232 TX
4	NA		RS-485 Ground
5	NA		RS-485 (-)
6	NA		RS-485 (+)

Figure 36: MobileView 3012 front panel

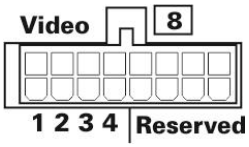

MV 3012 Plug 8			
Pin Position	**Harness Wire Color**		**Use**
C1	--	--	Not Used
C2	--	--	Not Used
C3	--	--	Not Used
C4	--	--	Not Used
C5	COAX	NA	Shield/Shell Channel 4 (S)
C6	COAX	NA	Shield/Shell Channel 3 (S)
C7	COAX	NA	Shield/Shell Channel 2 (S)
C8	COAX	NA	Shield/Shell Channel 1 (S)
C9	--	--	Not Used
C10	--	--	Not Used
C11	--	--	Not Used
C12	--	--	Not Used
C13	COAX	NA	Video Channel 4 (V)
C14	COAX	NA	Video Channel 3 (V)
C15	COAX	NA	Video Channel 2 (V)
C16	COAX	NA	Video Channel 1 (V)

Figure 37: MobileView 3012 front panel

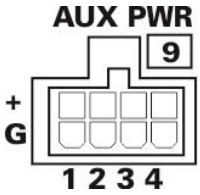

MV 3012 Plug 9			
Pin Position	**Color**		**Use**
1	Black		GND
2	Black		GND
3	Black		GND
4	Black		GND
5	Red		12V (+) / Camera Power
6	Red		12V (+) / Camera Power
7	Red		12V (+) / Camera Power
8	Red		12V (+) / Camera Power

Figure 38: MobileView 3012 front panel

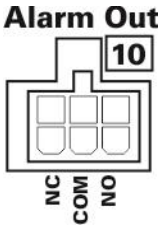

MV 3012 Plug 10			
Pin Position	**Harness Wire Color**		**Use**
1	Blue		Relay 1 NO
2	Brown		Relay 1 Common
3	White		Relay 1 NC
4	Purple		Relay 2 NO
5	Grey		Relay 2 Common
6	Orange		Relay 2 NC

Figure 39: MobileView 3012 front panel

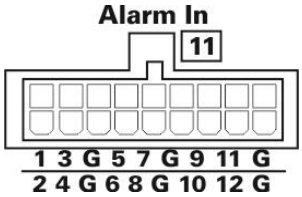

MV 3012 Plug 11			
Pin Position	**Harness Wire Color**		**Use**
1	Green		12v (Digital Return)
2	Blue		Digital Input 12
3	Red		Digital Input 10
4	Black		GND
5	Grey		Digital Input 8
6	Orange		Digital Input 6
7	Green		12v (Digital Return)
8	Blue		Digital Input 4
9	Red		Digital Input 2
10	Green		12v (Digital Return)
11	White		Digital Input 11
12	Yellow		Digital Input 9
13	Green		12v (Digital Return)
14	Purple		Digital Input 7
15	Brown		Digital Input 5
16	Green		12v (Digital Return)
17	White		Digital Input 3
18	Yellow		Digital Input 1

Cable Connections

J1 input power connections

Main power, ground, and ignition are supplied to the 6-pin Molex connector labeled J1 on the DVR.

J1 harness connections

The J1 harness couples a 6-pin Molex type connector to the J1 connector (Figure 40 on page 41). This arrangement provides dedicated termination points for main power, ground, and ignition. Common and specific usage of each termination point is provided in Table 1 on page 41. Looping outputs are

generally used to power and control the MobileView wireless network transmission device.

Figure 40: Main power connection

Table 1: J1 harness pinout

Vehicle Connection to J1 Power Harness w/Integrated Fuses					
J1 Harness, Vehicle Termination - Male Receptacle Housing					Termination Description
Molex Recptacle Hsg	**6-Pin Molex**	**Color**		**Use**	
3 6 / 2 5 / 1 4 Rear View	1	Red		Main Power In	Main Power (+12 or 24VDC), circuit protected
	2	Black		Return In	Battery Ground
	3	White		Ignition In	Ignition Power (+12 or 24VDC) circuit protected
	4	Red		Main Power Out	To WiMax MRT +VDC Main Power Input
	5	Black		Return Out	To WiMax MRT GND Input
	6	White		Ignition Out	Available for future use

J6 video input connections

Connect up to eight cameras to the MobileView 3012 DVR with the J6 cable harness.

J6 harness connections

The J6 harness couples eight BNC barrel type connectors to the J6 connector (see Figure 41 below). This arrangement provides dedicated termination points for each video input. Each BNC is color-coded and labeled to indicate the assigned video input number. See Figure 41 below and Table 2 on page 43 for added detail on J6 harness color code and video input assignments.

Figure 41: J6 harness, video cable

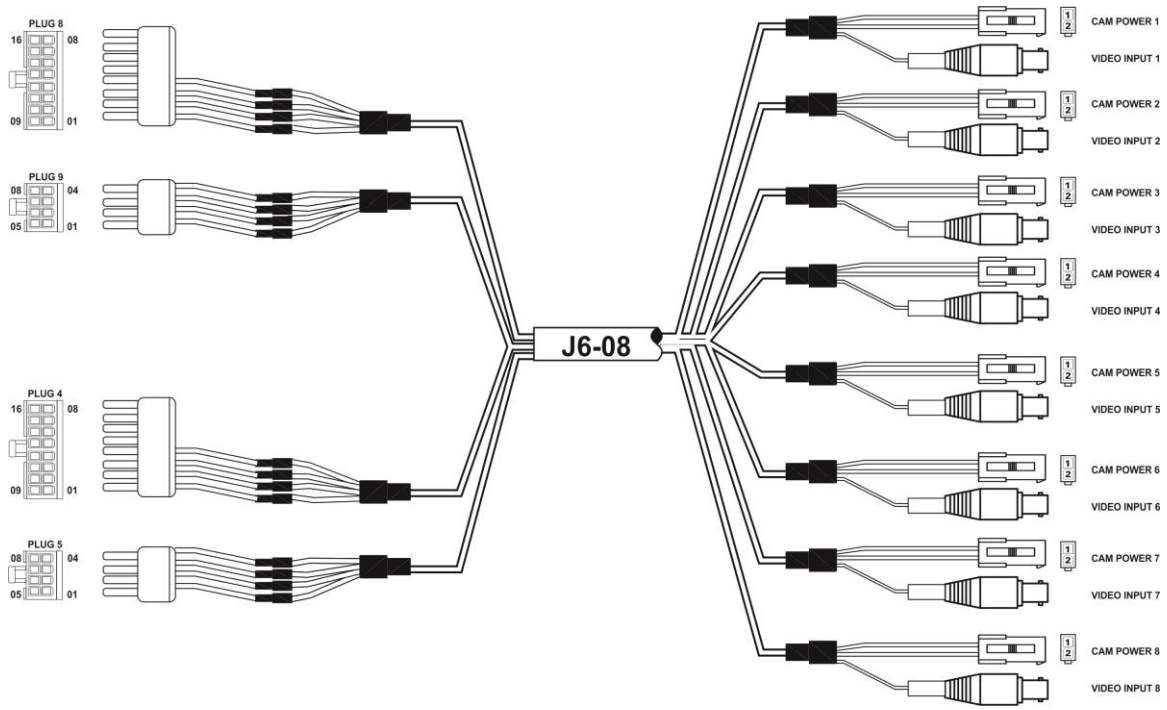

See Table 2 on page 43 for the harness pinouts.

Table 2: J6 harness pinout

J6 Harness, Vehicle Termination - BNC & Male Receptacle Housing					Termination Description
BNC Connector	**BNC Position**	**Color**		**Use**	
	BNC B1				
	Video	Yellow		Video Channel 1	Video Input, Camera Channel 1
BNC 1 to 4	Shield/Shell				
	BNC B2				
	Video	Red		Video Channel 2	Video Input, Camera Channel 2
	Shield/Shell				
	BNC B3				
S=Shield/Shell	Video	White		Video Channel 3	Video Input, Camera Channel 3
V=Video	Shield/Shell				
	BNC B4				
	Video	Blue		Video Channel 4	Video Input, Camera Channel 4
	Shield/Shell				
Hsg	**2-Pin Molex**	**Color**		**Use**	Termination Description
	RECPT 1-1	Red		Power (+) Camera 1	12VDC (+) Camera 1
Recpt 1 to 4	RECPT 1-2	Black		GND	Ground Camera 1
	RECPT 2-1	Red		Power (+) Camera 2	12VDC (+) Camera 2
	RECPT 2-2	Black		GND	Ground Camera 2
	RECPT 3-1	Red		Power (+) Camera 3	12VDC (+) Camera 3
Front View	RECPT 3-2	Black		GND	Ground Camera 3
	RECPT 4-1	Red		Power (+) Camera 4	12VDC (+) Camera 4
	RECPT 4-2	Black		GND	Ground Camera 4
BNC Connector	**BNC Position**	**Color**		**Use**	
	BNC B5				
	Video	Brown		Video Channel 5	Video Input, Camera Channel 5
BNC 5 to 8	Shield/Shell				
	BNC B6				
	Video	Orange		Video Channel 6	Video Input, Camera Channel 6
	Shield/Shell				
	BNC B7				
S=Shield/Shell	Video	Purple		Video Channel 7	Video Input, Camera Channel 7
V=Video	Shield/Shell				
	BNC B8				
	Video	Grey		Video Channel 8	Video Input, Camera Channel 8
	Shield/Shell				
Hsg	**2-Pin Molex**	**Color**		**Use**	Termination Description
	RECPT 5-1	Red		Power (+) Camera 5	12VDC (+) Camera 5
Recpt 5 to 8	RECPT 5-2	Black		GND	Ground Camera 5
	RECPT 6-1	Red		Power (+) Camera 6	12VDC (+) Camera 6
	RECPT 6-2	Black		GND	Ground Camera 6
	RECPT 7-1	Red		Power (+) Camera 7	12VDC (+) Camera 7
Front View	RECPT 7-2	Black		GND	Ground Camera 7
	RECPT 8-1	Red		Power (+) Camera 8	12VDC (+) Camera 8
	RECPT 8-2	Black		GND	Ground Camera 8

J3 digital input channel connections

The MobileView 3012 provides eight digital inputs on the ten-terminal Phoenix connector labeled J3. Connection of specific terminals to optional hardware devices is detailed in Chapter 5 “Optional hardware installation” on page 85.

The J3 connector uses retaining screws to ensure that it does not disconnect during operation. By design, the connector is easily removed if the retaining screws are fully disengaged and a slight force perpendicular to the connector is applied. Ensure that the retaining screws are fully engaged or unwanted disconnection may occur.

Digital inputs

Each open collector digital input treats an input voltage between 5 to 30 VDC with respect to digital ground as activated or closed. Inputs less than 1 VDC are treated as deactivated or open. Voltages between 1 to 4 VDC have no guarantee of being seen as activated or deactivated.

Refer to Chapter 5 “Optional hardware installation” on page 85 for more information on connecting digital inputs to peripheral devices.

J3 harness connections

The J3 harness couples an 18-pin Molex type connector to the J3 connector (see Figure 42 below). This arrangement provides dedicated termination points for each digital input, two digital ground, and eight 12 VDC (+) outputs. Common and specific usage of each termination point is provided in Table 3.

Figure 42: J3 harness, digital input connection

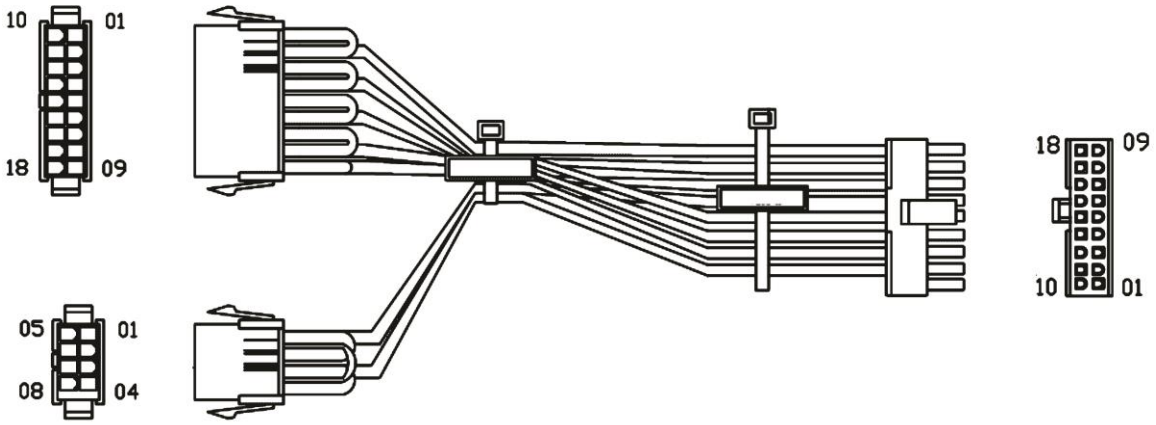

Table 3: J3 harness pinout

J3 Harness, Vehicle Termination - Male Receptacle Housing					Termination Description
Molex Recptacle Hsg	18-Pin Molex	Color		Use	
	1	Yellow		Digital Input 1	To Yellow wire on MobileView Event Button Modules UTC P/N MSS-4008-00-00 or MSS-4008-WK-00
9 18	2	Red		Digital Input 2	Available for future use (MobileView Impact Sensor UTC P/N MSS-7100-00-02 not supported)
8 17	3	White		Digital Input 3	Available for future use
7 16	4	Blue		Digital Input 4	Available for future use
6 15	5	Brown		Digital Input 5	Available for future use
5 14	6	Orange		Digital Input 6	Available for future use
4 13	7	Purple		Digital Input 7	Available for future use
3 12	8	Grey		Digital Input 8	Available for future use
2 11	9	Black		GND	Spare Ground
1 10	10	Black		GND (Digital Return)	To Yellow wire on MobileView Event Button Modules UTC P/N MSS-4008-00-00 or MSS-4008-WK-00
Rear View	11	Black		GND (Digital Return)	Available for future use (MobileV iew Impact Sensor UTC P/N MSS-7100-00-02 not supported)
	12	Black		GND (Digital Return)	Available for future use
	13	Black		GND (Digital Return)	Available for future use
	14	Black		GND (Digital Return)	Available for future use
	15	Black		GND (Digital Return)	Available for future use
	16	Black		GND (Digital Return)	Available for future use
	17	Black		GND (Digital Return)	Available for future use
	18	Black		GND	Spare Ground (White wire on MobileView Event Button Module with Reset UTC P/N MSS-4008-WK-00)
	8-Pin				
	1	Yellow		Digital Input 9	Available for future use
4 8	2	Red		Digital Input 10	Available for future use
3 7	3	White		Digital Input 11	Available for future use
2 6	4	Blue		Digital Input 12	Available for future use
1 5	5	Black		GND (Digital Return)	Available for future use
Rear View	6	Black		GND (Digital Return)	Available for future use
	7	Black		GND (Digital Return)	Available for future use
	8	Black		GND (Digital Return)	Available for future use

J2 audio and status connections

The MobileView 3012 provides two audio inputs and two status outputs on the eight-terminal Phoenix connector labeled J2 (see Figure 43 below). More information on the connection of specific terminals to optional hardware devices can be found in Chapter 5 “Optional hardware installation” on page 85.

The J2 connector uses retaining screws to ensure that it does not disconnect during operation. By design, the connector is easily removed if the retaining screws are fully disengaged and a slight force perpendicular to the connector is applied. Ensure that the retaining screws are fully engaged or unwanted disconnection may occur.

Figure 43: J2 audio and status connection

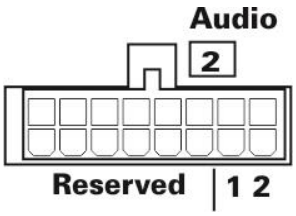

Audio connections

The MobileView 3012 supports two channels of audio recording on line level inputs. Each audio channel is one half of a stereo input. Audio input 1 is the left channel and audio input 2 is the right channel. During playback, filtering between

the audio inputs is accomplished using the balance tool on the playback computer.

See “Installing a microphone” on page 87 for more information on connecting a microphone to the DVR in both single and dual channel configurations.

Status connections

The camera and software LED outputs provide a quick means of determining the operating status of the DVR.

- Camera LED. This output is normally inactive and turns ON when a fault condition occurs in the DVR. The most common fault is video loss from a configured camera.
- Software LED. This output is normally active and turns OFF if the DVR software stops running.

Note: If the software is not running, neither the camera nor software LED outputs will work.

These open collector outputs are designed to work with the MobileView MSS-4008 series status devices. The devices are equipped with one red and green LED. The red LED is reserved for connection to the camera output and the green LED to the software output. For more information, see “Installing a ” on page 86.

J2 harness connections

The J2 harness couples a 14-pin Molex-type connector to the J2 connector (see Figure 44 on page 47). This arrangement provides dedicated termination points for audio input, microphone power, and DVR status outputs along with spare voltage and ground points. Common and specific usage of each termination point is provided in Table 4 on page 47.

Figure 44: J2 cable harness

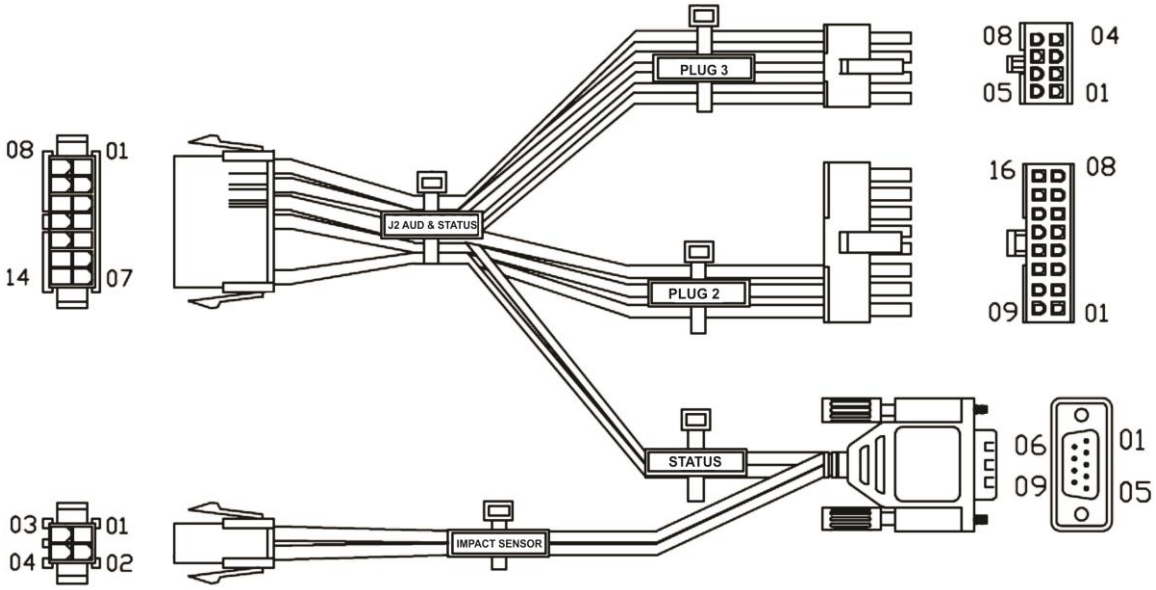

Table 4: J2 harness pinout

J2 Audio & Status Harness

ination - Male Receptacle Housing

Molex Recptacle Hsg

7	14
6	13
5	12
4	11
3	10
2	9
1	8

Rear View

14-Pin Molex	Color		Use	Termination Description
1	Brown		AUD1+	Mic 1 - To Audio + 2 terminal on MobileView Microphone UTC P/N MSS-4007-00-00
2	Yellow		AUD2+	Mic 2 - To Audio + 2 terminal on MobileView Microphone UTC P/N MSS-4007-00-00
3	Blue		12VDC+ (Mic 1 Power)	Mic 1 - 12VDC Power input on MobileView Microphone UTC P/N MSS-4007-00-00
4	Blue		12VDC+ (Mic 2 Power)	Mic 2 - 12VDC Power input on MobileView Microphone UTC P/N MSS-4007-00-00
5	Blue		12VDC+ (Status LED Power)	To Gray wire on MobileView Event Button Modules UTC P/N MSS-4008-00-00 or MSS-4008-WK-00
6	--	--	Not Used	Not Used
7	Blue		12VDC+ (Spare)	To +12 VDC wire on Cisco Radio, WiMax ProST Radio, or WiMax MRT I/O cable
8	Black		GND (AUD1 Return)	Mic 1 - To Audio - 3 terminal on MobileView Microphone UTC P/N MSS-4007-00-00
9	Black		GND (AUD2 Return)	Mic 2 - To Audio - 3 terminal on MobileView Microphone UTC P/N MSS-4007-00-00
10	Black		GND (Mic 1 PWR Return)	Mic 1 - Power GND on MobileView Microphone UTC P/N MSS-4007-00-00
11	Black		GND (Mic 2 PWR Return)	Mic 2 - Power GND on MobileView Microphone UTC P/N MSS-4007-00-00
12	Red		Red Status LED (Camera)	To Red wire on MobileView Event Button Modules UTC P/N MSS-4008-00-00 or MSS-4008-WK-00
13	Green		Green Status LED (Software)	To Green wire on MobileView Event Button Modules UTC P/N MSS-4008-00-00 or MSS-4008-WK-00
14	Black		GND (Spare)	To GND wire on Cisco Radio, WiMax ProST Radio, or WiMax MRT I/O cable

CN2 Molex Plug Hsg

2	4
1	3

Rear View

4-Pin Molex	Color		Use	This information applies to the cable attached to the accelerometer
1	Green		RS-232 Data Receive	To Accelerometer Device
2	White		RS-232 Data Transmit	To Accelerometer Device
3	Red		5V+	To Accelerometer Device
4	Black		Signal & Electrical Return (Ground)	To Accelerometer Device

Note: The audio inputs are two monaural halves of a stereo input. The input is 1V RMS line level. Connection to input signals over 1V RMS can cause result in distorted audio.

J5 relay output connections

The MobileView 3012 provides two Form C relay outputs at connector J5.

Analog input

The DVR provides two analog inputs. These inputs convert the continuous voltage sensed at the terminal into a discrete numeric representation of the instantaneous value. Once converted, analog values above or below set points can be identified as discrete events, against which specific system responses can be programmed. A potential usage of the analog input is tracking temperature fluctuations of key vehicle systems.

Not all vehicle systems that might be monitored provide a voltage output. When one is not available, a conversion device with corresponding voltage output is required. Such devices are specific to the monitored system and UTC neither provides nor specifies them.

The analog to digital converter on the DVR is an eight-bit device supporting up to 255 discrete set points. Set points range between 0 to 254 and correspond to an input voltage range of 0 to 30 VDC. If full-scale input voltage is less than 30 VDC, then only a corresponding range of the 255 set points will be available.

If full-scale input is greater than 30 VDC, the input voltage must be reduced to fall within the supported range. Voltage reduction may be accomplished using a simple voltage divider network (see Figure 45 below).

Figure 45: Voltage divider, analog input

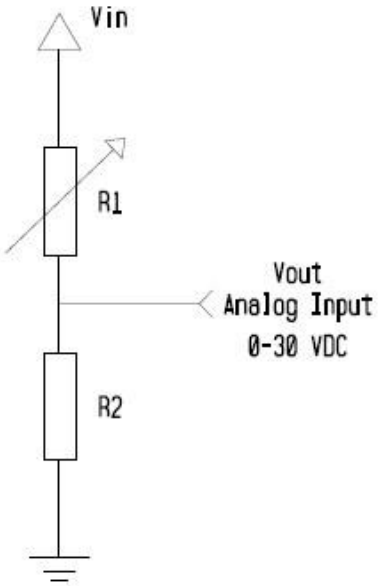

In Figure 45 above, a certain amount of the input voltage (Vin) is expended across resistor R1. The remaining voltage, Vout, is routed and monitored by the analog input. It is up to the installer to determine the proper values of R1 and R2 based on specified voltage input variables.

The value of VOUT is determined by the formula below.

```
Vout = (R2 * Vin) / (R1 + R2)
```

Since DVR analog inputs support a maximum voltage input of 30 VDC, Vout is always 30 VDC. For most applications, R2 can be set to 10 kΩ and the value of Vin is the full scale value of the voltage input to be measured. Solving the above equation for variable R1 allows simple calculation of its required value.

```
R1 = (R2 * Vin / Vout) - R2
```

In the example above, to monitor a 40 VDC variable input using a DVR analog input would require an R1 of 3.3 kΩ with an R2 of 10 kΩ.

```
R1 = (R2 * Vin / Vout) - R2
R1 = (10 kΩ * 40 VDC / 30 VDC) – 10 kΩ
R1 = 3.3 kΩ
```

Relay output

Relay contacts are shown in their de-energized state and are rated for 200 mA maximum current draw.

J5 harness connections

The J5 harness couples a ten-pin Molex type connector to the J5 connector (Figure 30). Except for audio output, this arrangement provides dedicated termination points for each connection. Common and specific usage of each termination point is provided in Table 5.

Figure 46: J5 harness relay connection

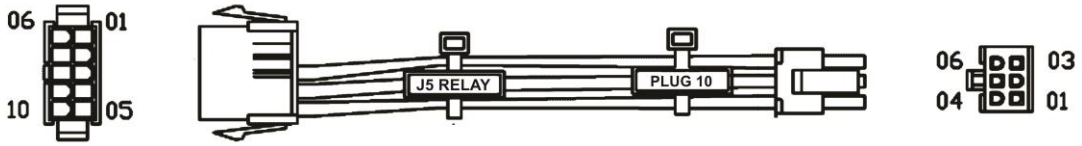

Table 5: J5 harness pinout

J5 Harness, Vehicle Termination - Male Receptacle Housing					Termination Description
Molex Recptacle Hsg	10-Pin Molex	Color		Use	
5 10 / 4 9 / 3 8 / 2 7 / 1 6 Rear View	1	--	--	Not Used	Not Used
	2	--	--	Not Used	Not Used
	3	White		Relay 1 NC	Available for future use
	4	Blue		Relay 1 NO	Available for future use
	5	Brown		Relay 1 Common	Available for future use
	6	--	--	Not Used	Not Used
	7	--	--	Not Used	Not Used
	8	Orange		Relay 2 NC	Available for future use
	9	Purple		Relay 2 NO	Available for future use
	10	Grey		Relay 2 Common	Available for future use

J7 Audio out connections

The MobileView 3012 provides two Form C relay outputs at connector J5.

Audio output

The audio outputs are two monaural halves of a stereo output. The output is 1V RMS line level and requires amplification by an external system.

Note: Connection to on-vehicle audio systems requires special configuration on both the DVR and the amplification system. Harness-based connection is not provided. Consult your UTC sales representative or technical support before connecting to external audio systems.

Figure 47: J7 harness relay connection

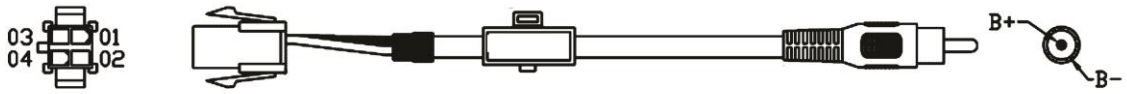

Table 6: J5 harness pinout

J7 Harness, Vehicle Termination - Male Receptacle Housing					Termination Description
Molex Recptacle Hsg	4-Pin Molex	Color		Use	
2 4 / 1 3 Rear View	1	White		Not Used	Audio Out (+)
	2	--	Not Used	Not Used	Not Used
	3	Shield (GND)		Not Used	Audio Out (-)
	4	--	Not Used	Not Used	Not Used

J8 Optional 485 and GPS connections

The MobileView 3012 provides optional connections for 485 and GPS outputs at connector J8.

Table 7: J8 harness pinout

MV3+ Plug 8 Connector- Molex Male Receptacle Housing					
M.Recpt Hsg	DVR Pin Position	Color		Use	DVR Pin to Harness Pin
	M1	–	–	Not Used	-
1 9	M2	–	–	Not Used	-
2 10	M3	–	–	Not Used	-
3 11	M4	–	–	Not Used	-
4 12	M5	COAX	NA	Shield/Shell Channel 4(S)	BNC4 (N) Shield/Shell
5 13	M6	COAX	NA	Shield/Shell Channel 3(S)	BNC3 (P) Shield/Shell
6 14	M7	COAX	NA	Shield/Shell Channel 2(S)	BNC2 (R) Shield/Shell
7 15	M8	COAX	NA	Shield/Shell Channel 1(S)	BNC1 (T) Shield/Shell
8 16	M9	–	–	Not Used	-
Front View	M10	–	–	Not Used	-
Plug 8	M11	–	–	Not Used	-
	M12	–	–	Not Used	-
	M13	COAX	NA	Video Channel 4 (V)	BNC4 (N) Video
	M14	COAX	NA	Video Channel 3 (V)	BNC3 (P) Video
	M15	COAX	NA	Video Channel 2 (V)	BNC2 (R) Video
	M16	COAX	NA	Video Channel 1 (V)	BNC1 (T) Video
MV3+ Plug 9 Connector- Molex Male Receptacle Housing					
K. Recpt Hsg	K1	Black		GND	PLUG 4-2 (L)
1 5	K2	Black		GND	PLUG 3-2 (O)
2 6	K3	Black		GND	PLUG 2-2 (Q)
3 7	K4	Black		GND	PLUG 1-2 (S)
4 8	K5	Red		12V (+)	PLUG 4-1 (L)
Front View	K6	Red		12V (+)	PLUG 3-1 (O)
Plug 9	K7	Red		12V (+)	PLUG 2-1 (Q)
	K8	Red		12V (+)	PLUG 1-1 (S)
MV3+ Plug 4 Connector- Molex Male Receptacle Housing					
C. Recpt Hsg	C1	–	–	Not Used	-
1 9	C2	–	–	Not Used	-
2 10	C3	–	–	Not Used	-
3 11	C4	–	–	Not Used	-
4 12	C5	COAX	NA	Shield/Shell Channel 8(S)	BNC4 (D) Shield/Shell
5 13	C6	COAX	NA	Shield/Shell Channel 7(S)	BNC3 (F) Shield/Shell
6 14	C7	COAX	NA	Shield/Shell Channel 6(S)	BNC2 (H) Shield/Shell
7 15	C8	COAX	NA	Shield/Shell Channel 5(S)	BNC1 (J) Shield/Shell
8 16	C9	–	–	Not Used	-
Front View	C10	–	–	Not Used	-
Plug 4	C11	–	–	Not Used	-
	C12	–	–	Not Used	-
	C13	COAX	NA	Video Channel 8(V)	BNC4 (D) Video
	C14	COAX	NA	Video Channel 7(V)	BNC3 (F) Video
	C15	COAX	NA	Video Channel 6(V)	BNC2 (H) Video
	C16	COAX	NA	Video Channel 5(V)	BNC1 (J) Video
MV3+ Plug 5 Connector- Molex Male Receptacle Housing					
A. Recpt Hsg	A1	Black		GND	PLUG 8-2 (B)
1 5	A2	Black		GND	PLUG 7-2 (E)
2 6	A3	Black		GND	PLUG 6-2 (G)
3 7	A4	Black		GND	PLUG 5-2 (I)
4 8	A5	Red		12V (+)	PLUG 8-1 (B)
Front View	A6	Red		12V (+)	PLUG 7-1 (E)
Plug 5	A7	Red		12V (+)	PLUG 6-1 (G)
	A8	Red		12V (+)	PLUG 5-1 (I)

Chapter 4
DVR configuration

Summary

This chapter provides information to help you troubleshoot problems and contact technical support in case you need assistance with your equipment.

Content

Network Connection

Direct PC Connection through Crossover Network Cable

The point-to-point connection of MobileView 3012 DVR and PC requires a crossover (crossed) network cable. This type of connection is ONLY used for direct connection to a single PC. Make sure that the PC is equipped with a 10/100 Mbps compatible network connection.

Figure 48: Direct PC Connection

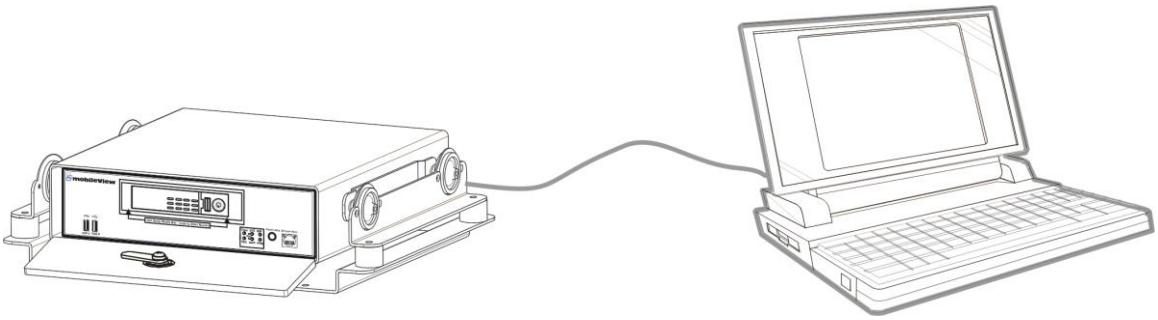

Final Installation Process

Once you have completed the basic wiring connections, you are ready to turn on the MobileView 3012 DVR. Simply plug in the power source. The power led will light up if power is normal. Once the system has finished loading, you can begin to set up the menu options for the MobileView 3012 DVR.

Note: When the MobileView 3012 DVR is placed in an environment where the temperature is under -0C°, the MobileView 3012 DVR will NOT turn on immediately. The heater will heat up the MobileView 3012 DVR until the temperature reaches -0C°. The MobileView 3012 DVR will only turn on when the temperature is above -0C°.

Remote Operation from Browser

Connecting to MobileView 3012

To access the DVR from a direct attached computer, perform the following steps.

1. Connect a network cable between the DVR front Ethernet port and computers wired Ethernet port
2. Set the computer IP address to the 192.168.0.x network
3. Open Internet Explorer 7, 8, or 9 (these are the only supported versions)
4. Set the URL to “192.168.0.100” and press ENTER
5. When prompted, enter credential information
   Default User: admin
   Default Pass: 11111111
6. Upon pressing enter, the DVR landing page showing live video will appear.

Figure 49: Main Page

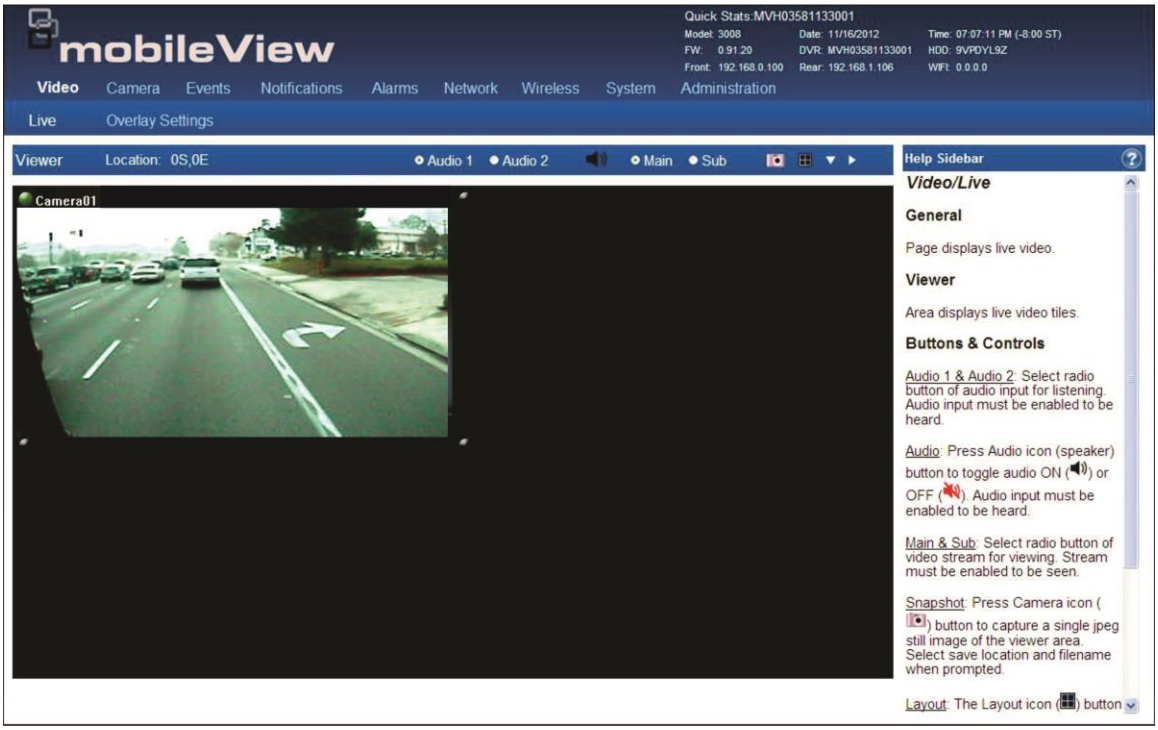

Main Home Page

The Main page provides access to the following configuration pages:

- Video
- Camera
- Events
- Notifications
- Alarms
- Network
- Wireless
- System
- Administration

Video Page

The Video page provides access to the following configuration pages:

- Live
- Overlay Settings

Live Page

Figure 50: Live View Browser page

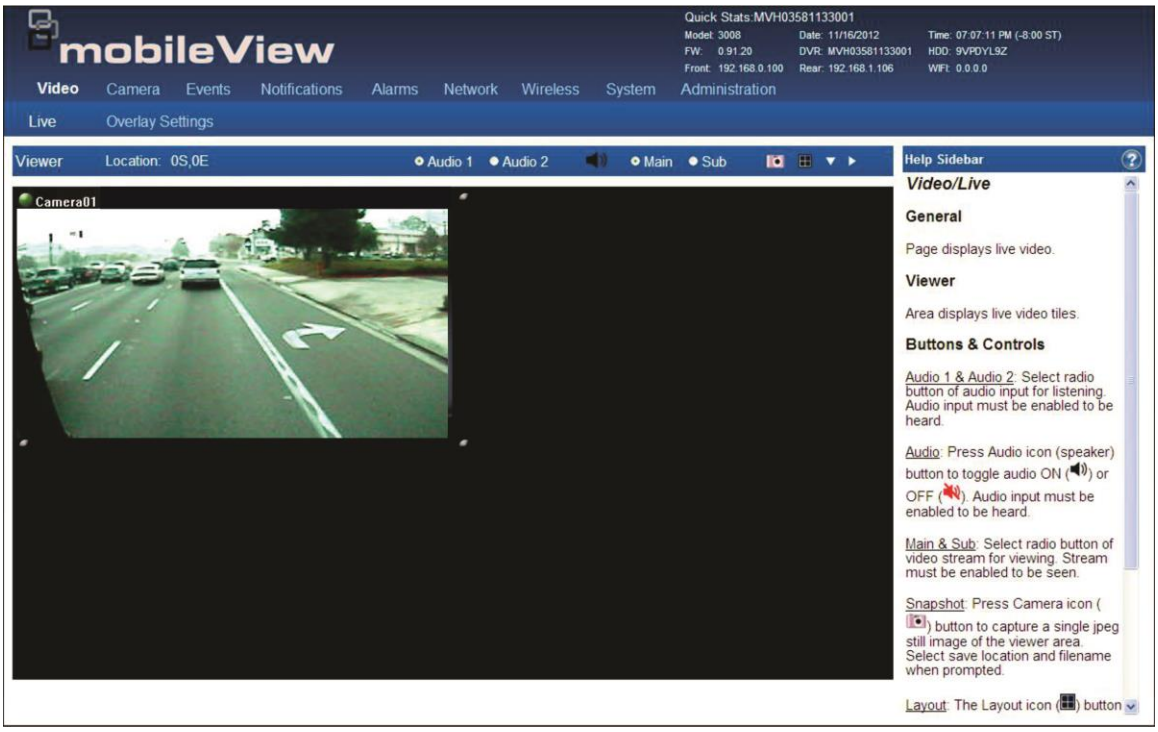

The following options are available on this page:

- Audio 1 & 2
- Audio
- Main & Sub
- Snapshot
- Layout
- Down Arrow
- Right Arrow

Overlay Page

Figure 51: Overlay Browser page

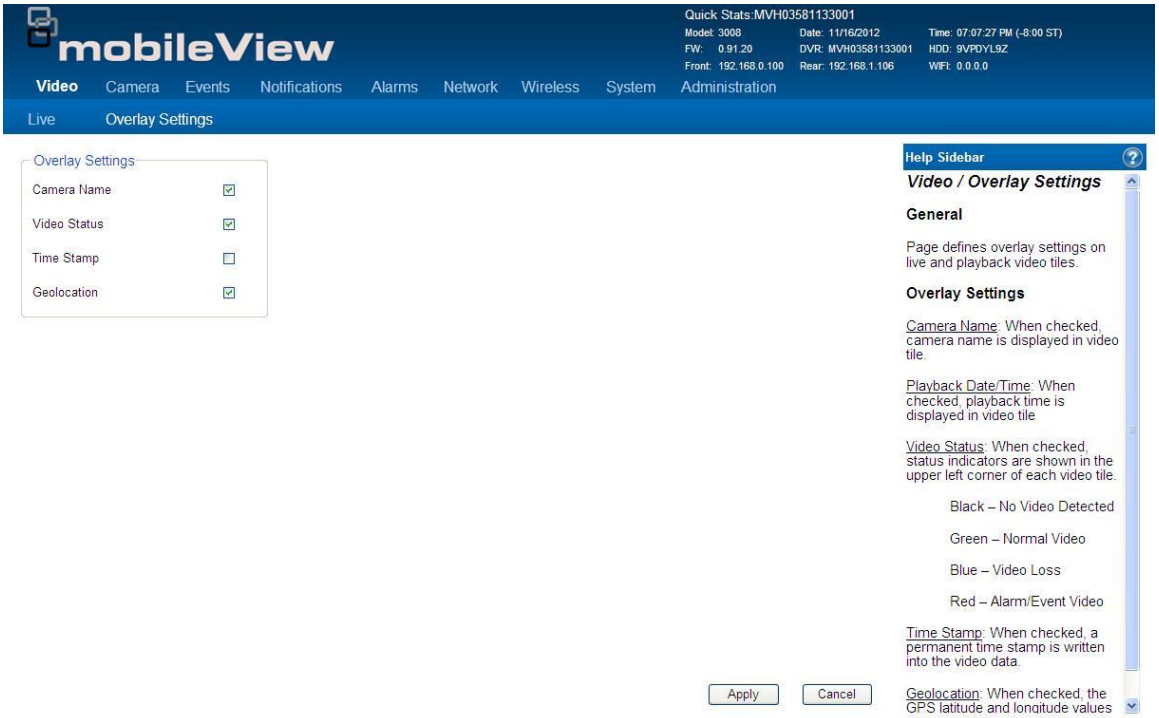

The following options are available on this page:

- Camera Name
- Video Status
- Time Stamp
- Geoleocation

Camera

The Camera page provides access to the following configuration pages:

- Summary
- Basic Settings

Camera/Summary Page

This page provides a general summary of the camera settings.

Figure 52: Camera Summary page

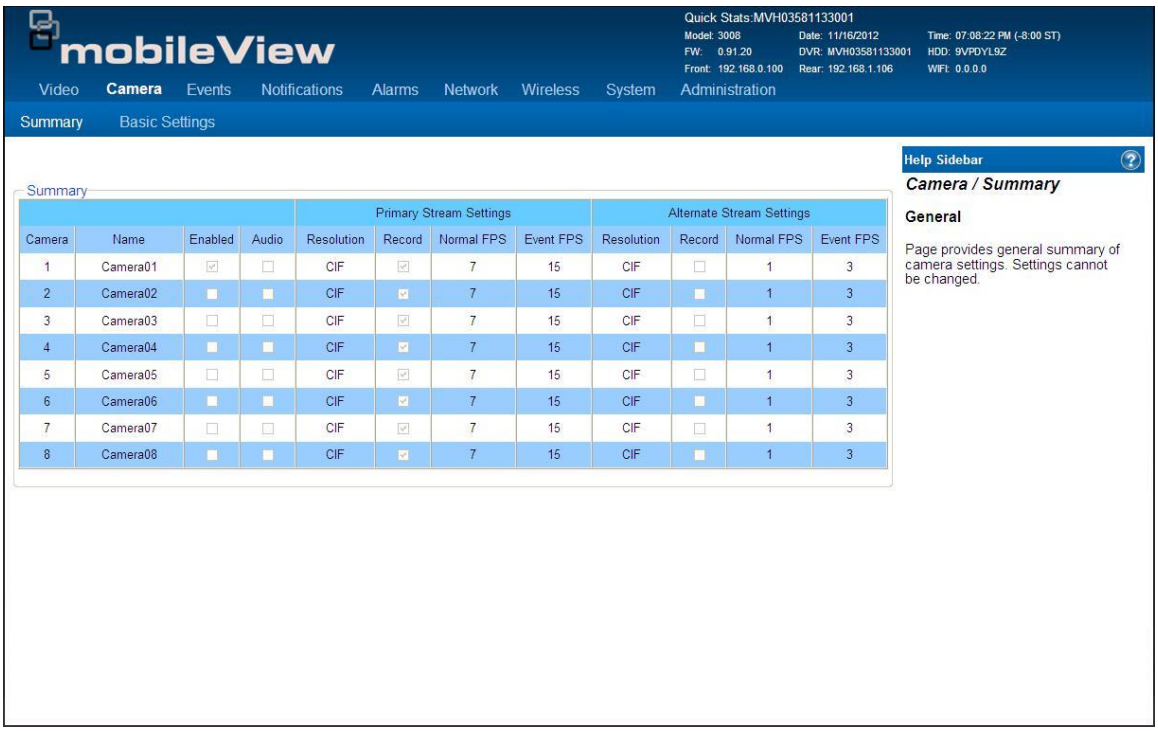

				Primary Stream Settings				Alternate Stream Settings			
Camera	Name	Enabled	Audio	Resolution	Record	Normal FPS	Event FPS	Resolution	Record	Normal FPS	Event FPS
1	Camera01	☑	☐	CIF	☑	7	15	CIF	☐	1	3
2	Camera02	☐	☐	CIF	☑	7	15	CIF	☐	1	3
3	Camera03	☐	☐	CIF	☑	7	15	CIF	☐	1	3
4	Camera04	☐	☐	CIF	☑	7	15	CIF	☐	1	3
5	Camera05	☐	☐	CIF	☑	7	15	CIF	☐	1	3
6	Camera06	☐	☐	CIF	☑	7	15	CIF	☐	1	3
7	Camera07	☐	☐	CIF	☑	7	15	CIF	☐	1	3
8	Camera08	☐	☐	CIF	☑	7	15	CIF	☐	1	3

Camera/Basic Settings Page

This page is used to configure the Cameras.

Figure 53: Camera/ Basic Settings page

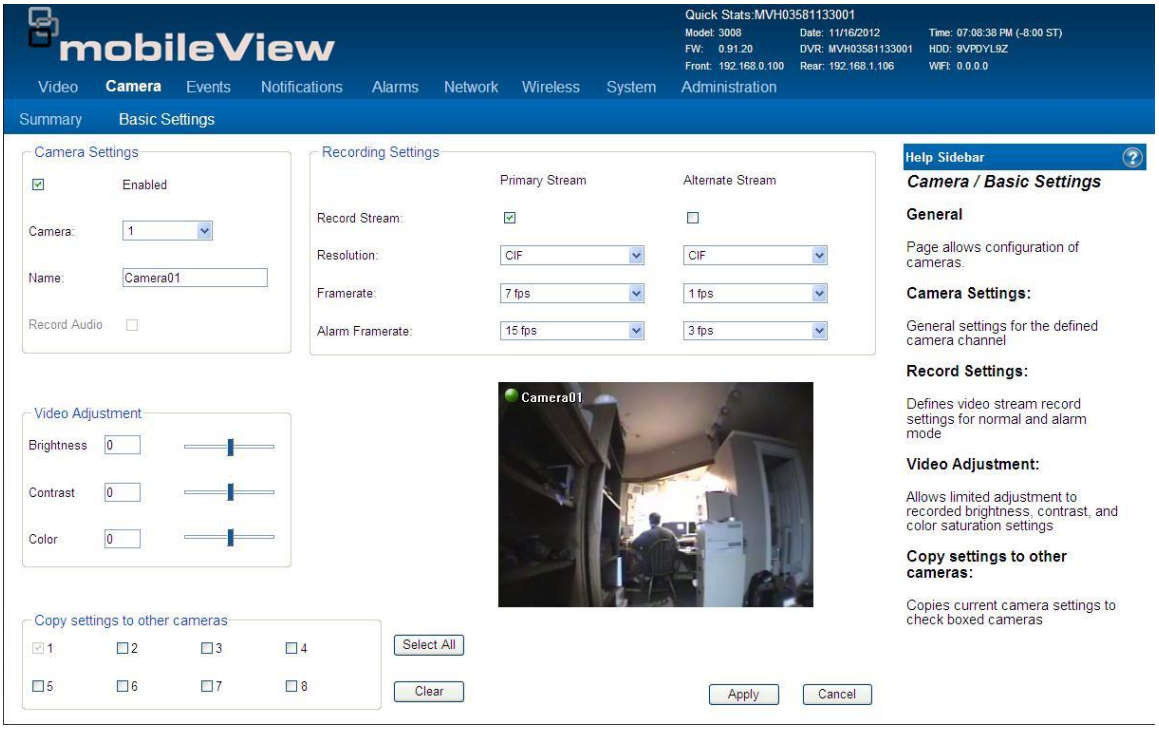

The following options are available on this page:

- Camera Settings
- Record Settings
- Video Adjustments
- Copy settings to other Cameras

Events

The Events page provides access to the following configuration pages:

- Event Summary
- Configure Event

Event Summary

This page provides a general summary of the Event Settings.

Figure 54: Events Summary page

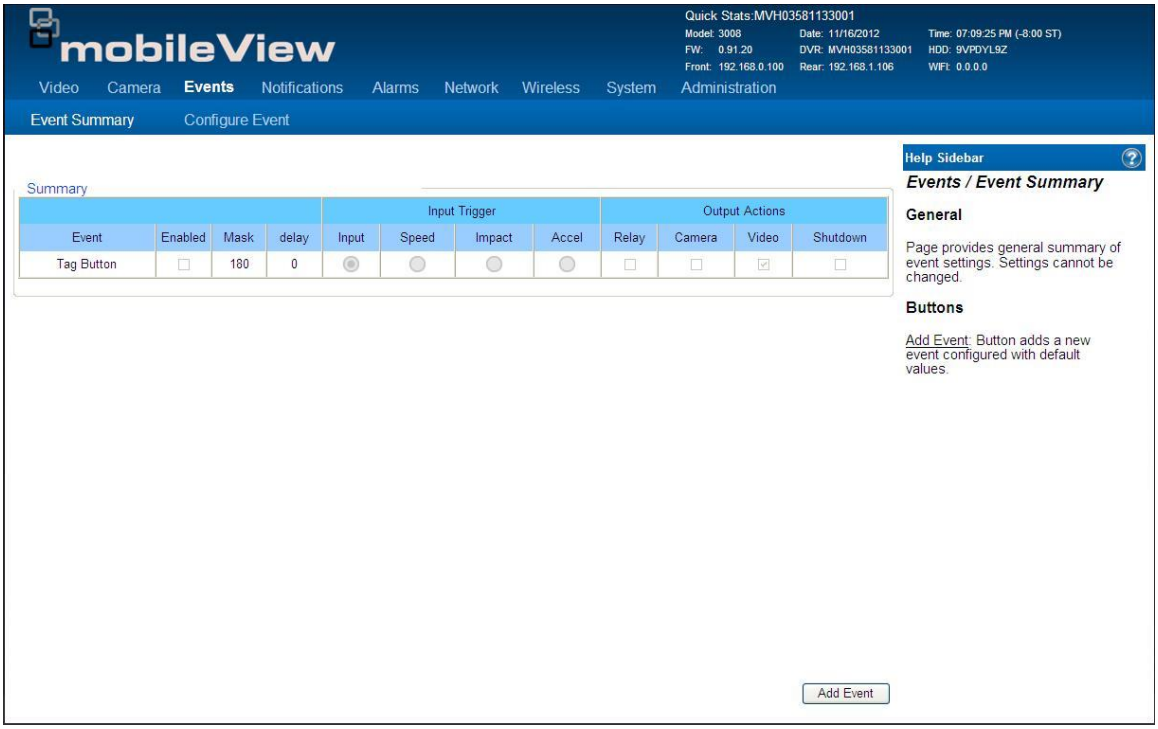

The following options are available on this page:

- Add Event button: Click to add a new event configured with the default values.

Configure Event

This page provides options for Event configuration.

Figure 55: Configure Events page

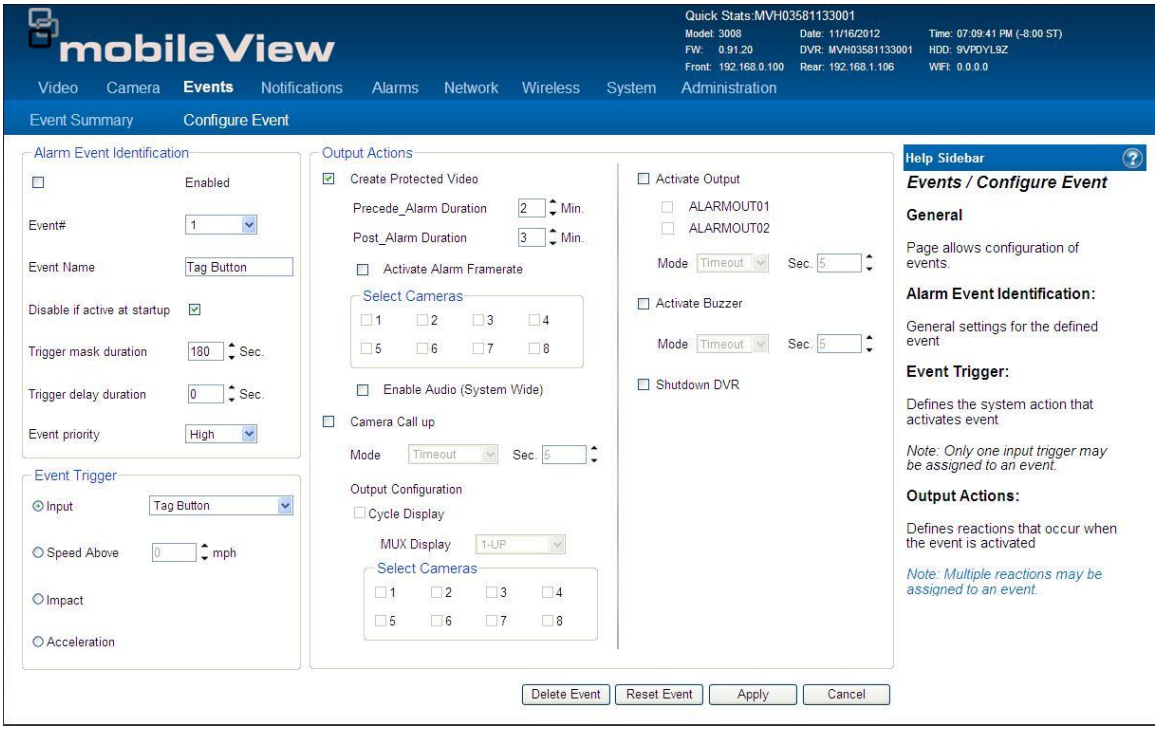

The following options are available on this page:

- Alarm Event Identification
- Event Trigger
- Output Actions
- Delete Event button
- Reset Event

Notifications

The Notifications page provides access to the following configuration pages:

- System Alarms
- G Sensor

Sytem Alarms

This page displays a summary of system faults and sets notification actions.

Figure 56: System Alarms page

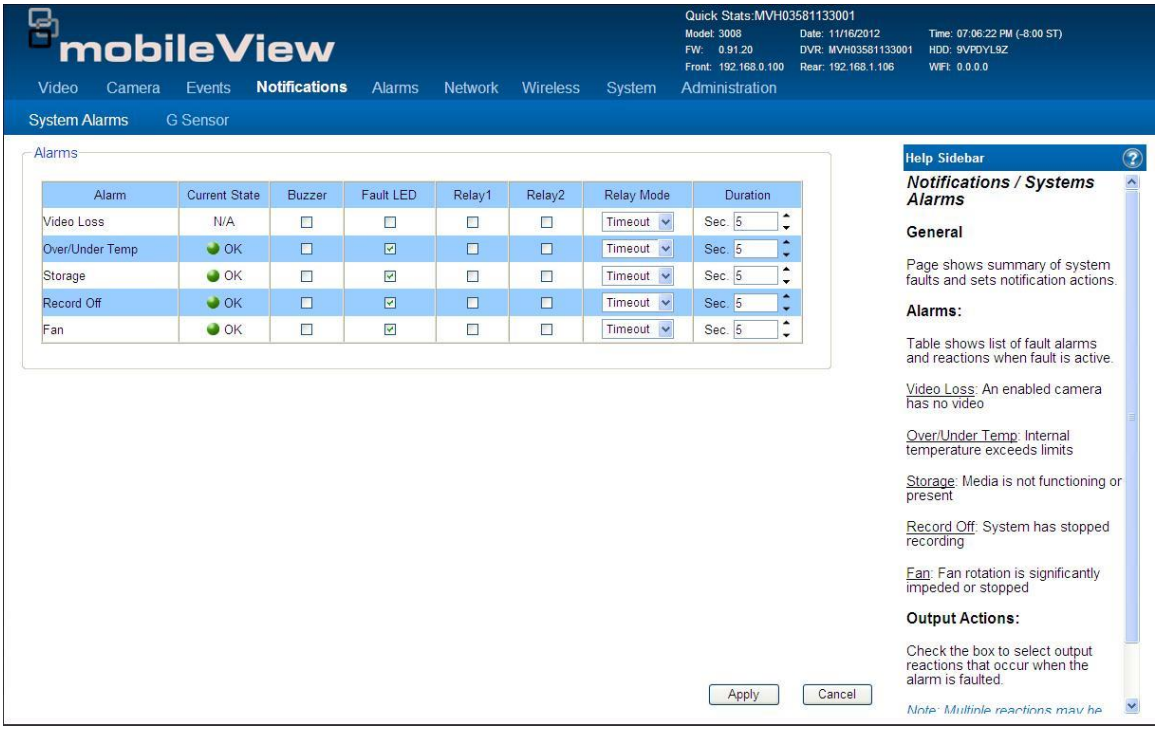

G Sensor

The G Sensor page configure system reactions when the recorder's onboard G Sensor determines forces that may exceed the operational parameters for rotational media.

Figure 57: G Sensor page

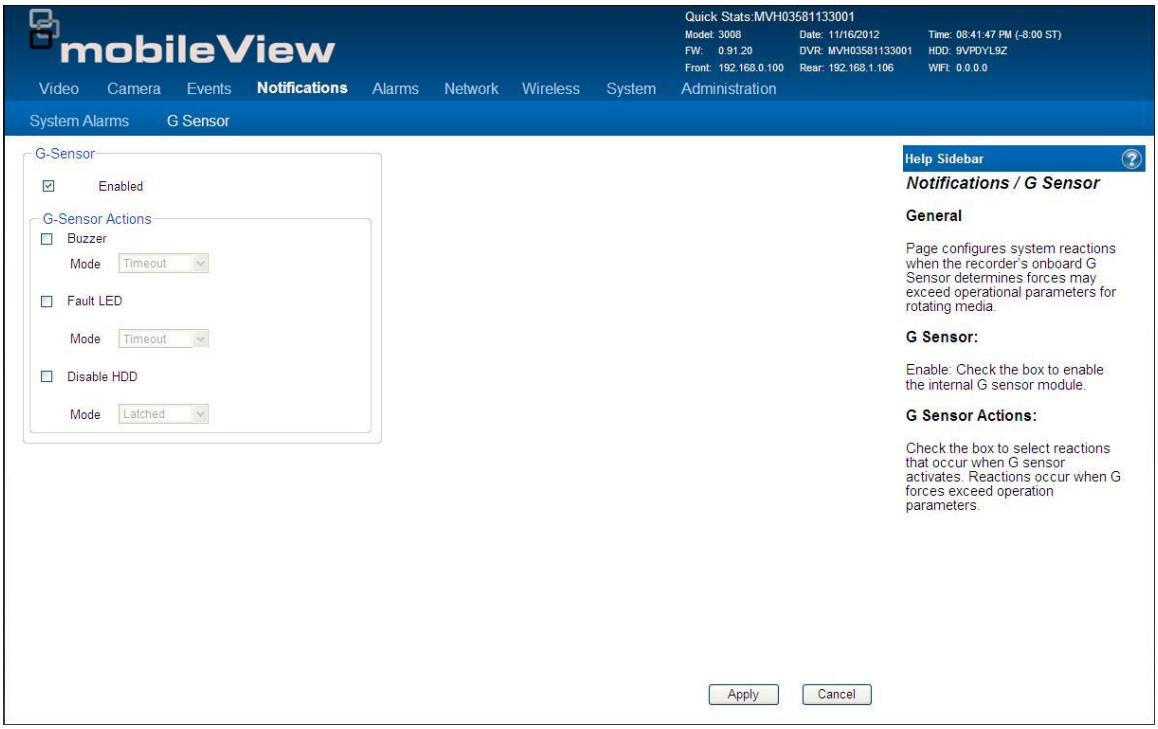

The following options are available on this page:

- G Sensor Enable
- Buzzer Mode
- Fault LED Mode
- Disable HDD Mode

Alarms

The Alarms page provides access to the following configuration pages:

- Alarm Inputs
- Alarm Outputs
- Accelerometer

Alarm Inputs

The page shows a summary of alarm input states and alows configuration of each Alarm's name and default state.

Figure 58: Alarms Inputs page

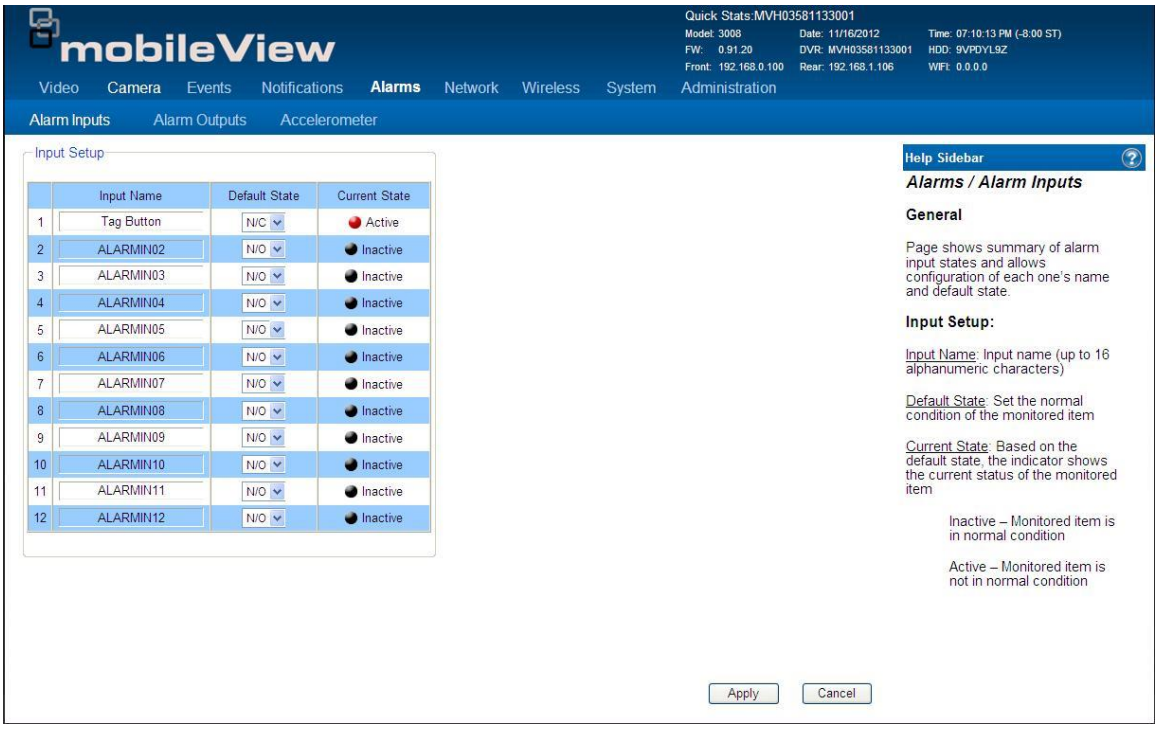

The following Alarm Input options are available on this page:

- Input Name
- Default State
- Current State

Alarm Outputs

This page shows a summary of relay output states and allows configuration of each Alarm Output's name and defaul state.

Figure 59: Alarm Output page

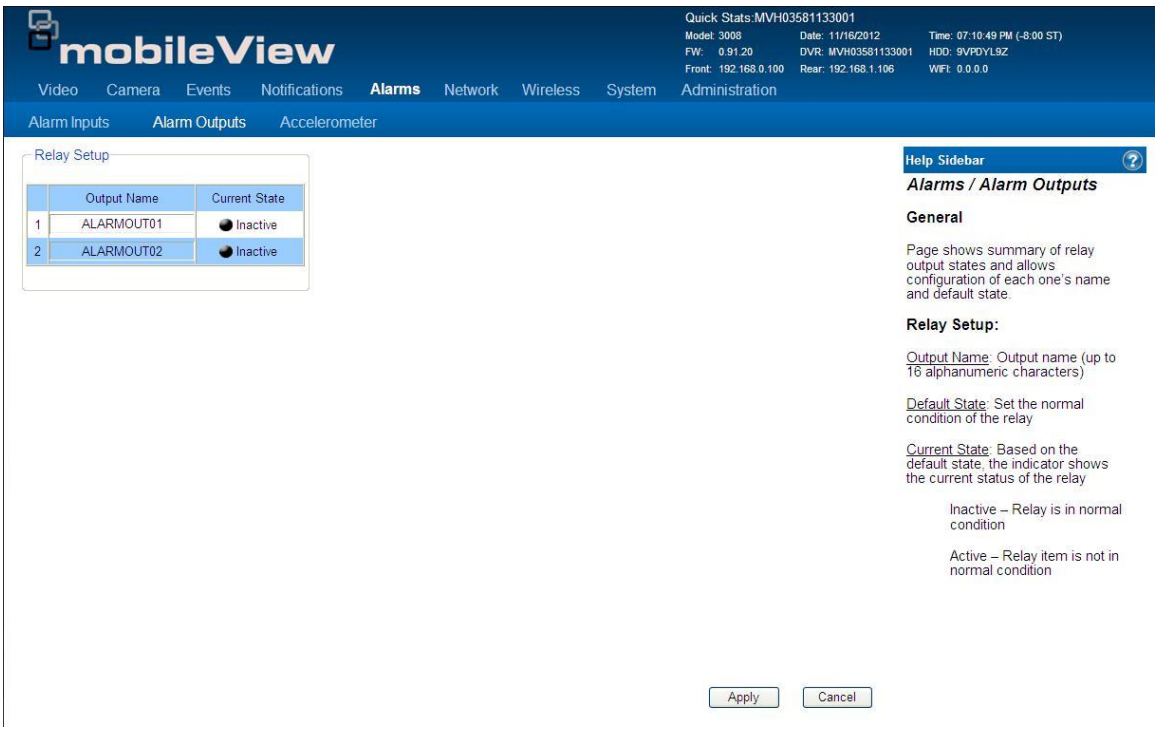

The following options are available on this page:

- Input Name
- Default State
- Current State

Accelerometer

This page defines the Accelerometer Alarms based on the force levels measured by the external accelerometer.

Figure 60: Accelerometer page

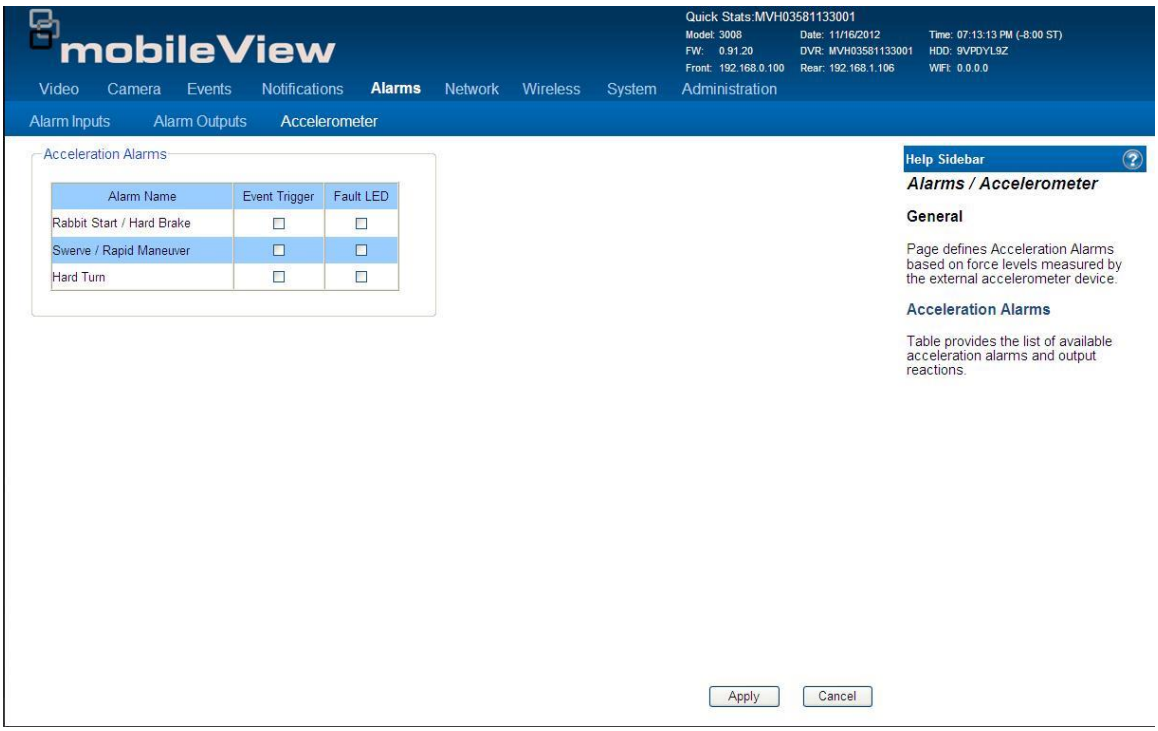

The following options are available on this page:

- Alarm Name
- Event Trigger
- Fault LED

Network

The Network page provides access to the following configuration pages:

- Ethernet Ports
- Auto Discovery

Ethernet Ports

This page allows for the configuration of the TCP/IP settings for the Ethernet ports.

Figure 61: Ethernet Ports page

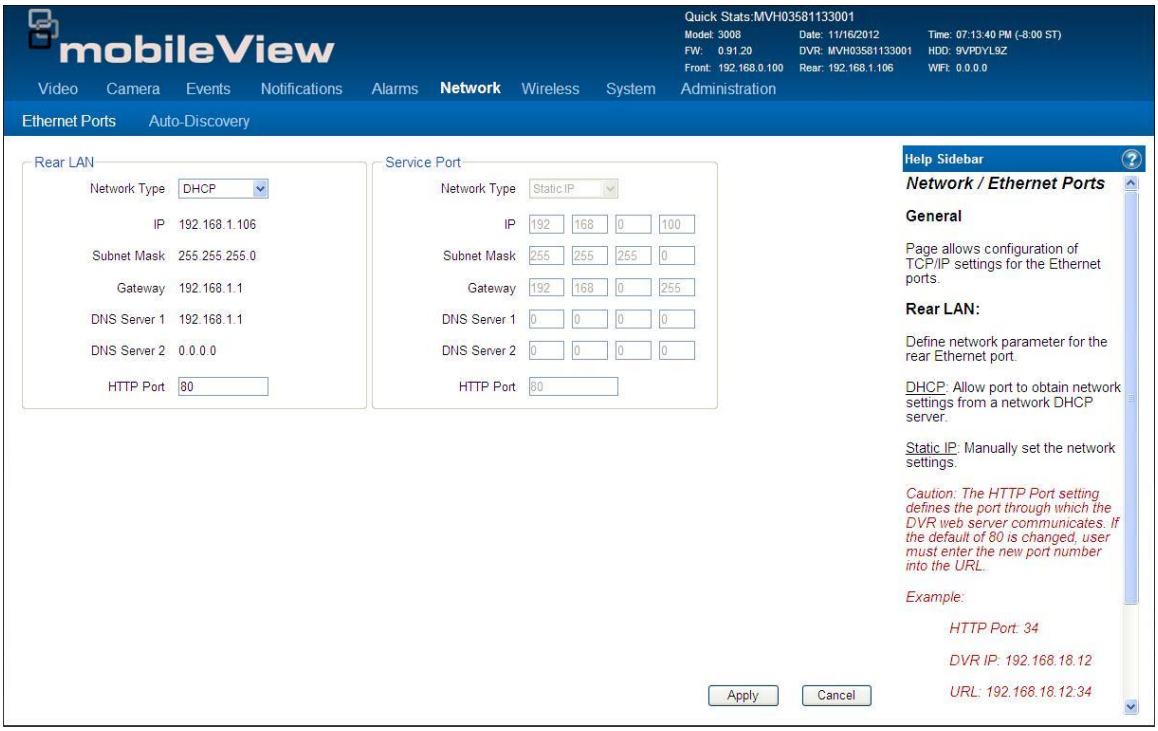

The following options are available on this page:

- Rear LAN
- Service Port

Auto Discovery

This page provides the configuration of network device discovery parameters.

Figure 62: Auto-Discovery page

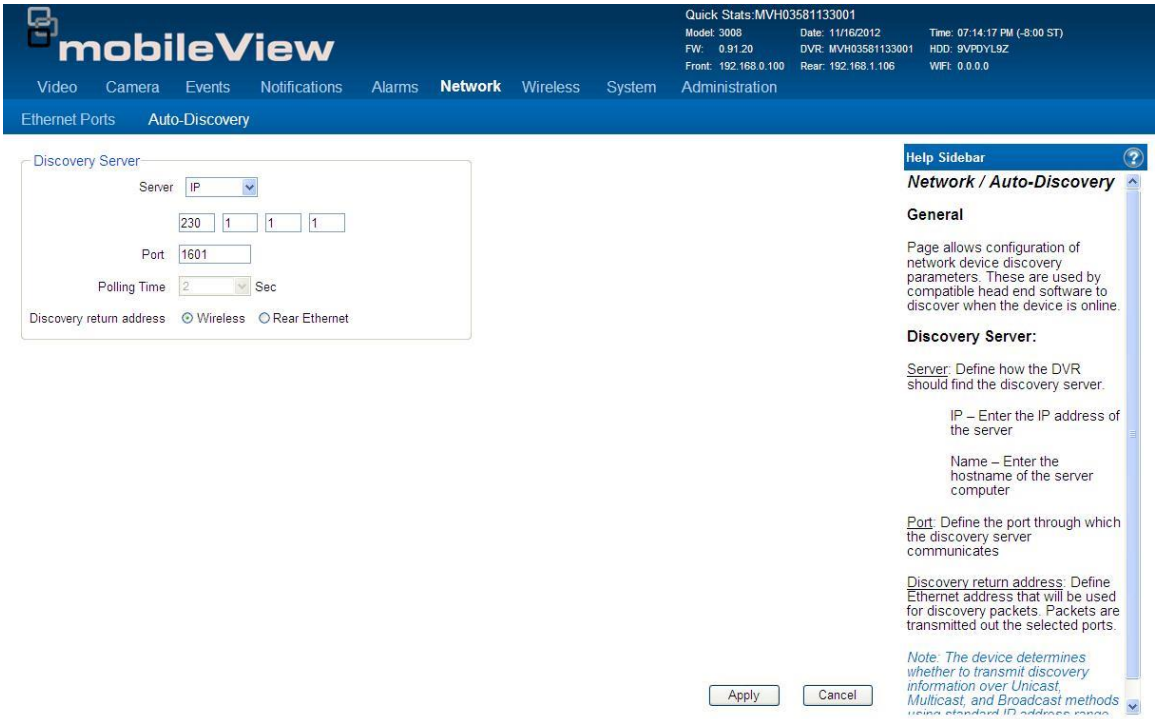

The following options are available on this page:

- Server type
- Port
- Discovery Return Address

Wireless

The Wireles page provides access to the following configuration pages:

- Basics
- Security
- Network

Basics

The Wireless/Basics page provides for the configuration of the basic wirelsss parameters.

Figure 63: Wireless/Basics page

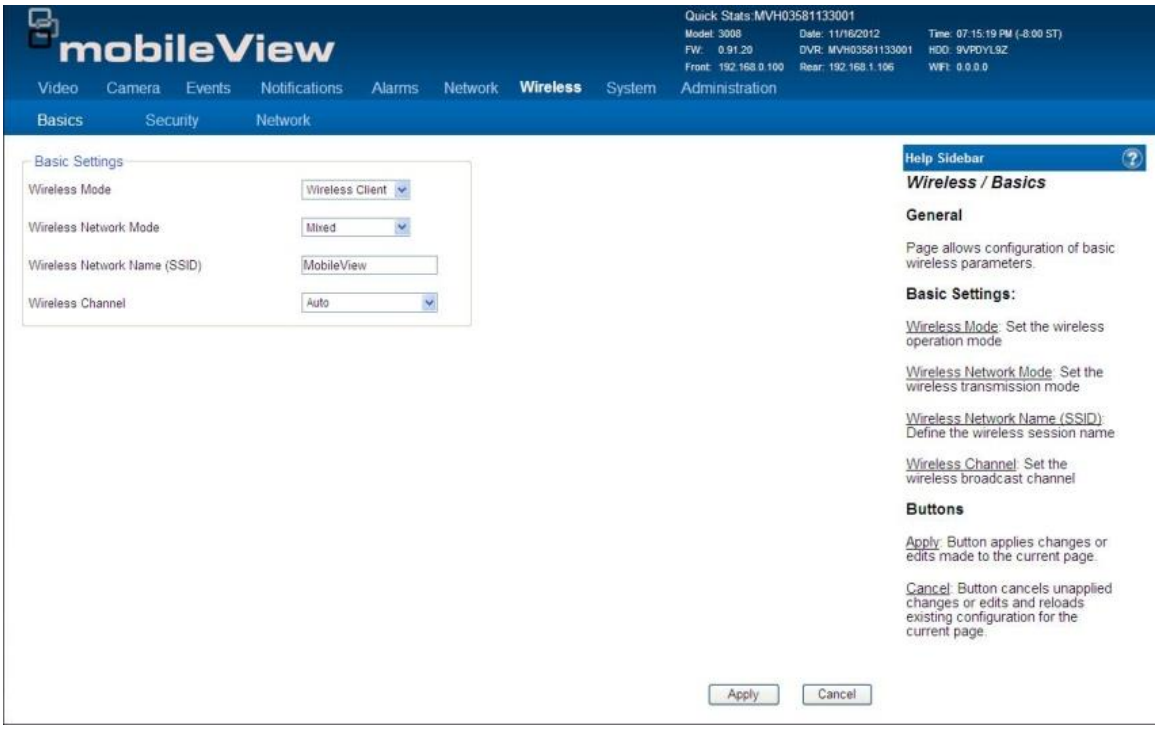

The following options are available on this page:

- Wireless Mode
- Wireless Network Mode
- Wireless Network Name (SSID)
- Wireless Channel

Wireless/Security

This page page provides the confgiuration of the security parameters for the wireless network

Figure 64: Wireless/Security page

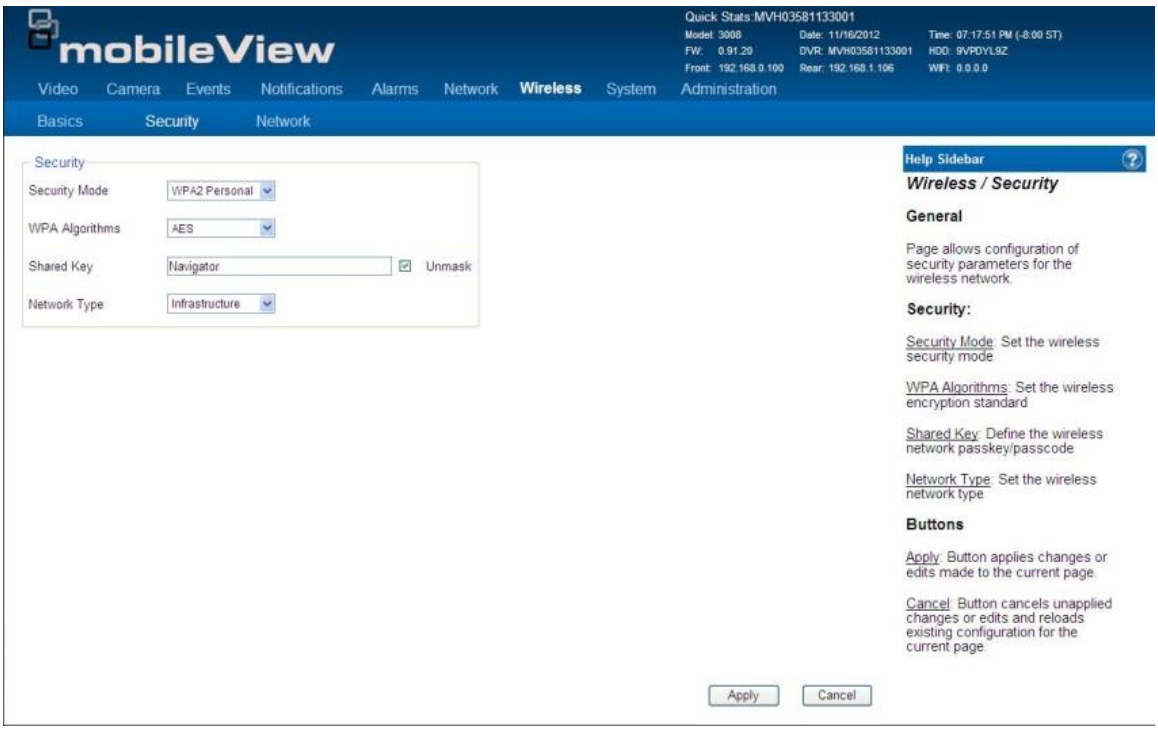

The following options are available on this page:

- Security Mode
- WPA Algorithms
- Shared Key
- Network Type

Wireless/Network

This page provides configuration of the the wireless TCP/IP settings for the DVR.

Figure 65: Wireless/Network page

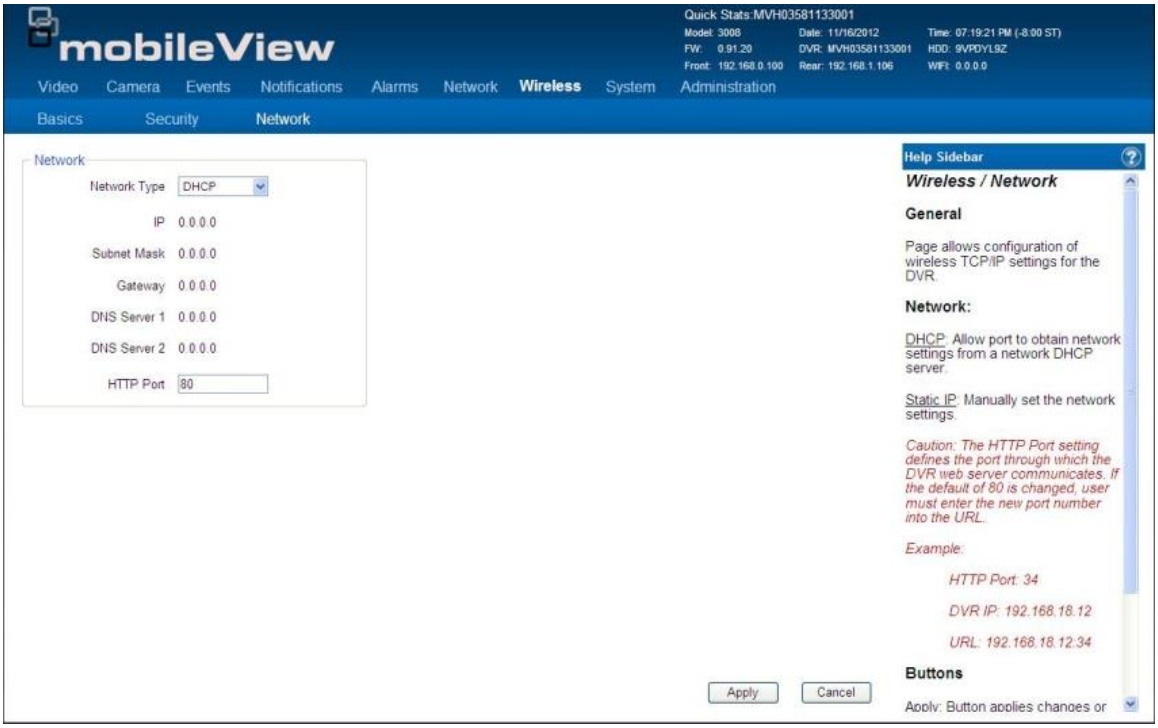

The following Network options are available on this page:

- Network Type
- Network Settings
- HTTP Port

System

The System page provides access to the following configuration pages:

- General
- Data Management
- Date & Time
- HDD Setup
- MUX
- Audio Setup
- Serial

Sytstem/General

Figure 66: System/General page

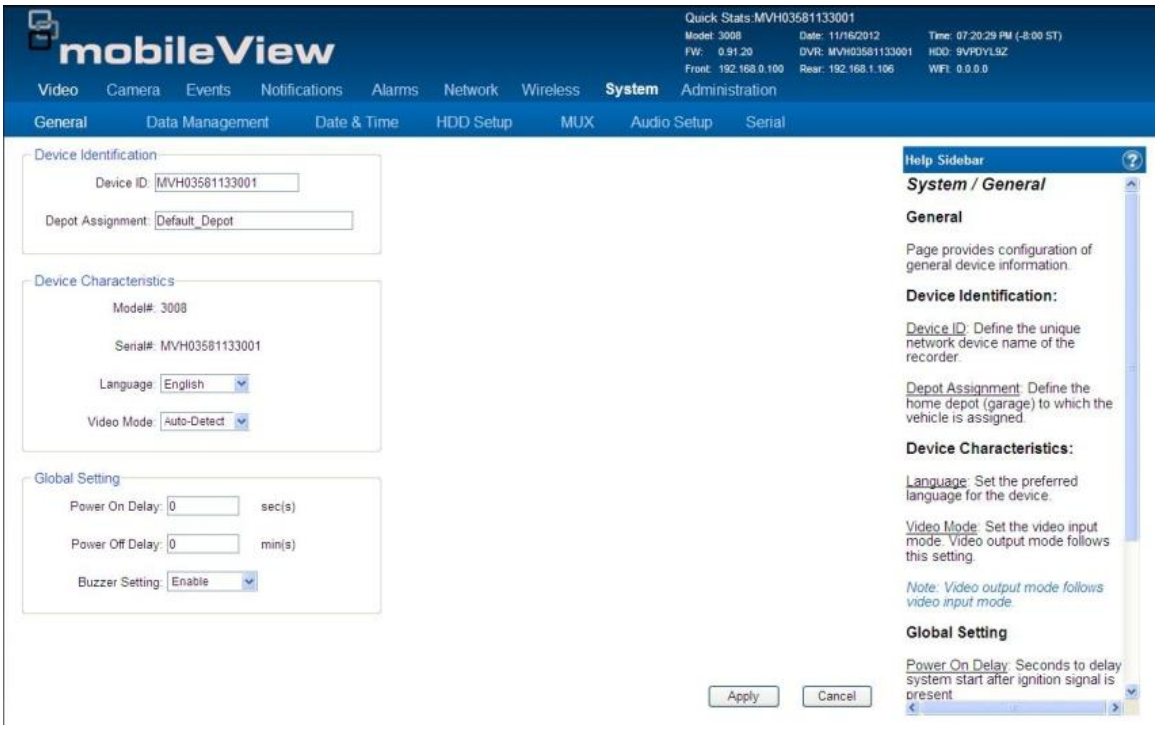

The following options are available on this page:

- Device Identification
- Device Characteristics
- Global Setting

System/Data Management

Figure 67: Data Management page

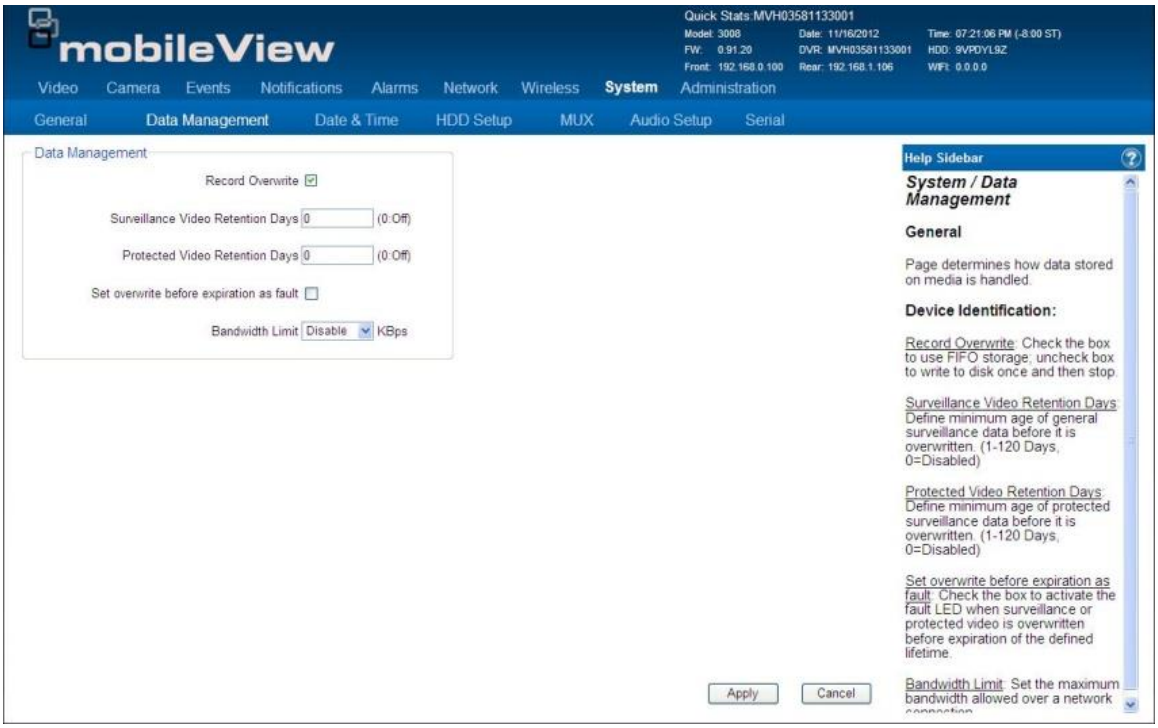

The following options are available on this page:

- Record Overwrite
- Surveillance Video Retention Days
- Protected Video Retention Days
- Set Overwrite
- Bandwidth Limit

System/Date & Time

Figure 68: Date & Time page

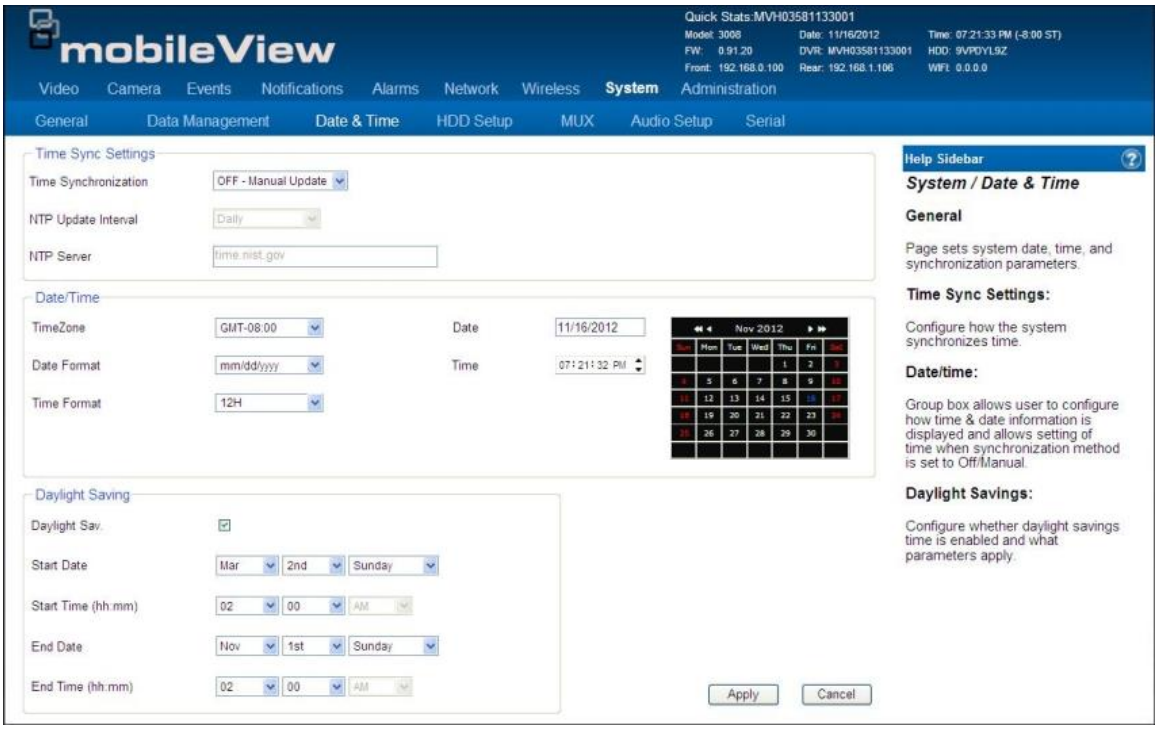

The following options are available on this page:

- Time Sync Settings
- Date & Time
- Daylight Saving

System/HDD Setup

Figure 69: HDD Setup page

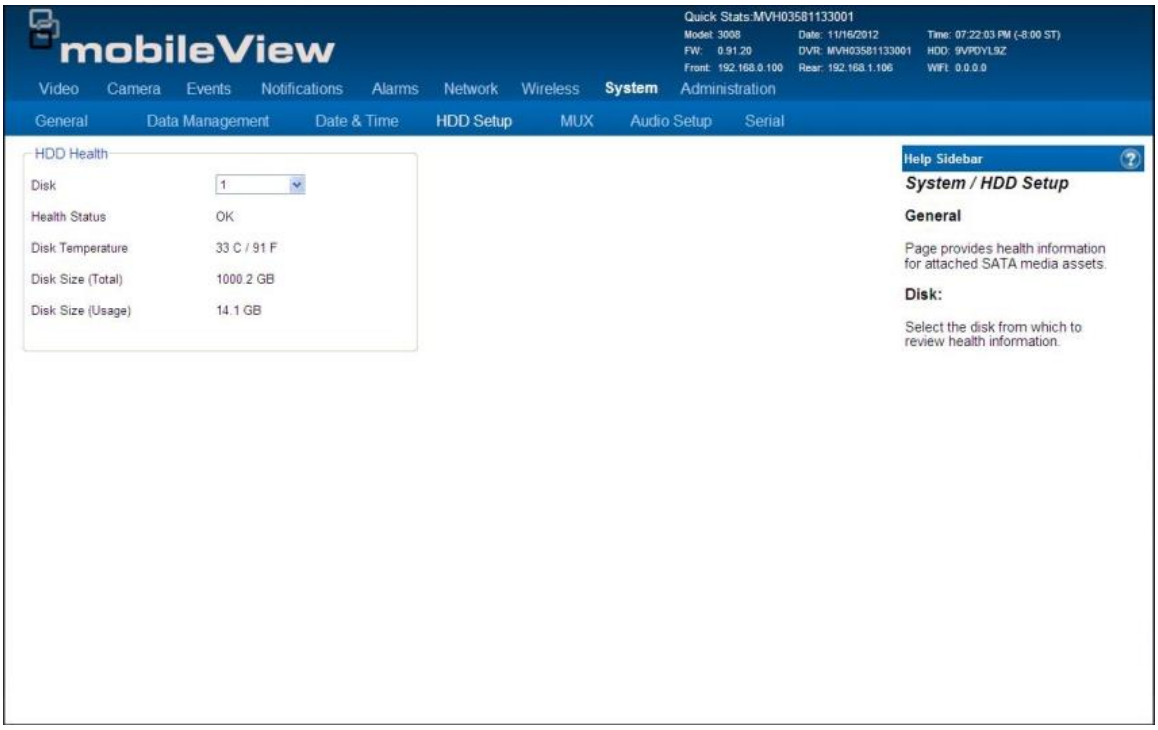

The following options are available on this page:

- Disk Number
- Health Status
- Disk Temperature
- Disk Size (Total)
- Dick Size (Usage)

System/MUX

Figure 70: MUX page

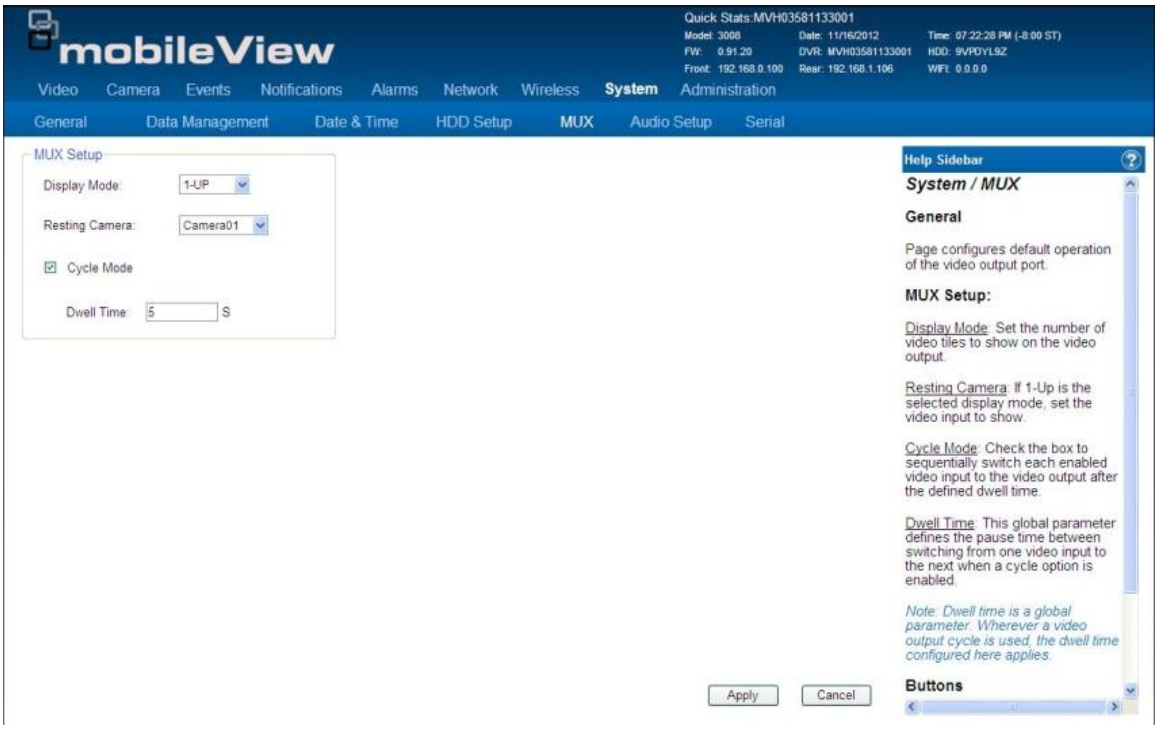

The following options are available on this page:

- Display Mode
- Resting Camera
- Cycle Mode
- Dwell Time

System/Audio Setup

Figure 71: Audio Setup page

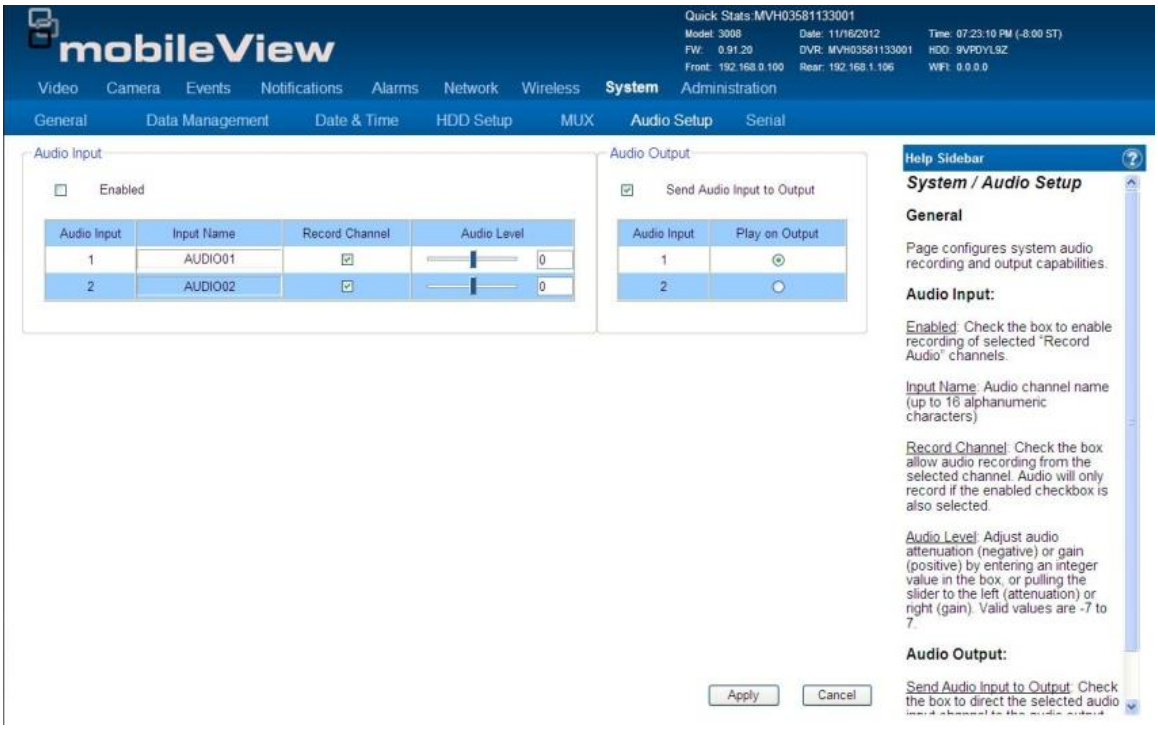

The following options are available on this page:

- Audio Input
- Audio Output

System/Serial

Figure 72: System Serial page

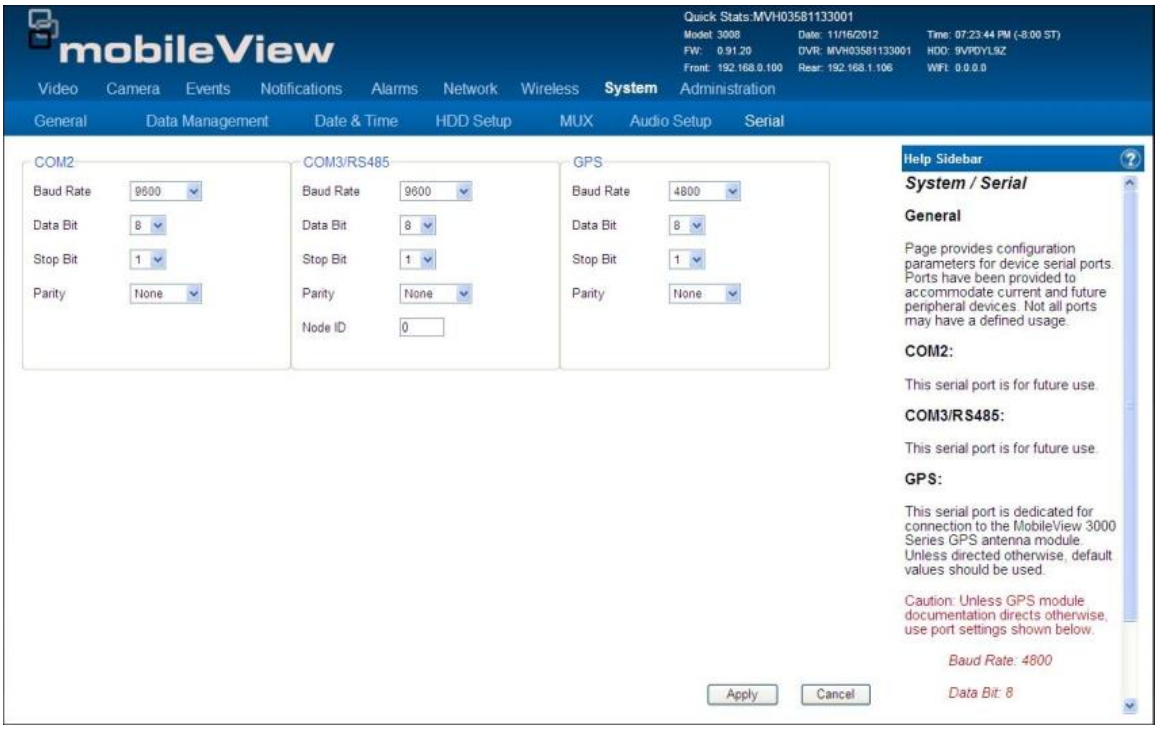

The following options are available on this page:

- COM2 Settings
- COM3/RS485 Settings
- GPS

Administration

The Administration page provides access to the following configuration pages:

- User
- Logging
- Config
- Firmware

Administration/User

Figure 73: User page

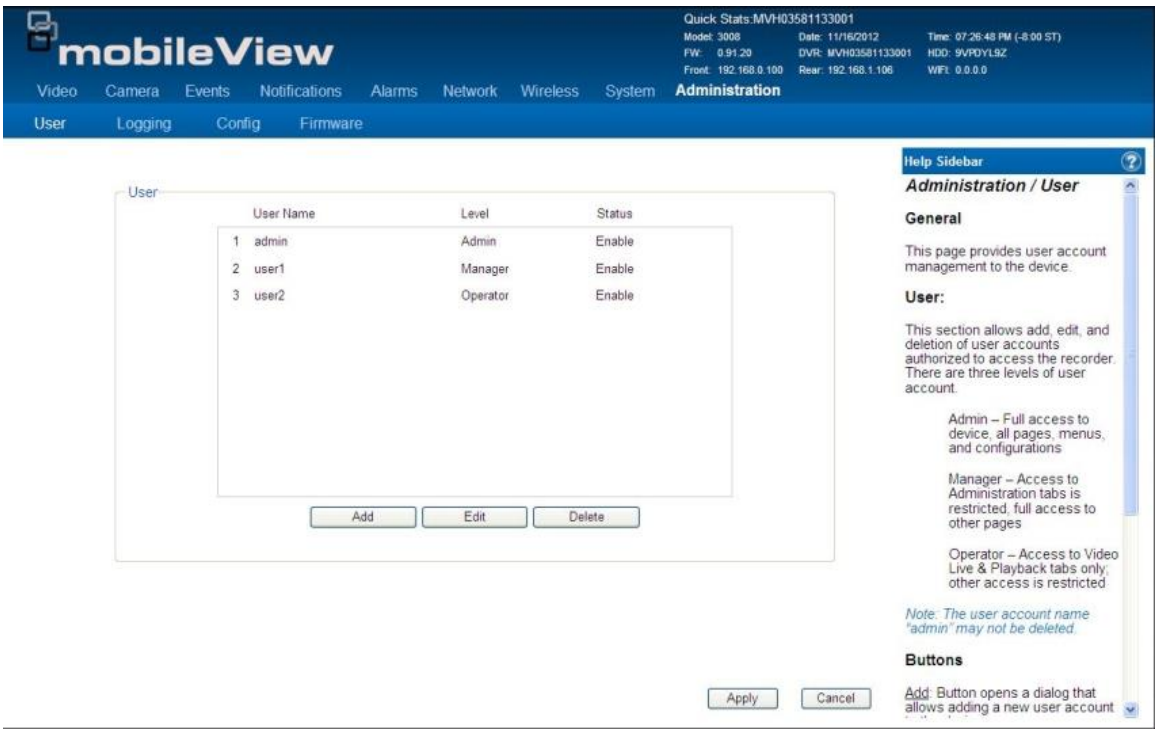

The following options are available on this page:

- Add User
- Edit User
- Delete User

Administration/Logging

Figure 74: Logging page

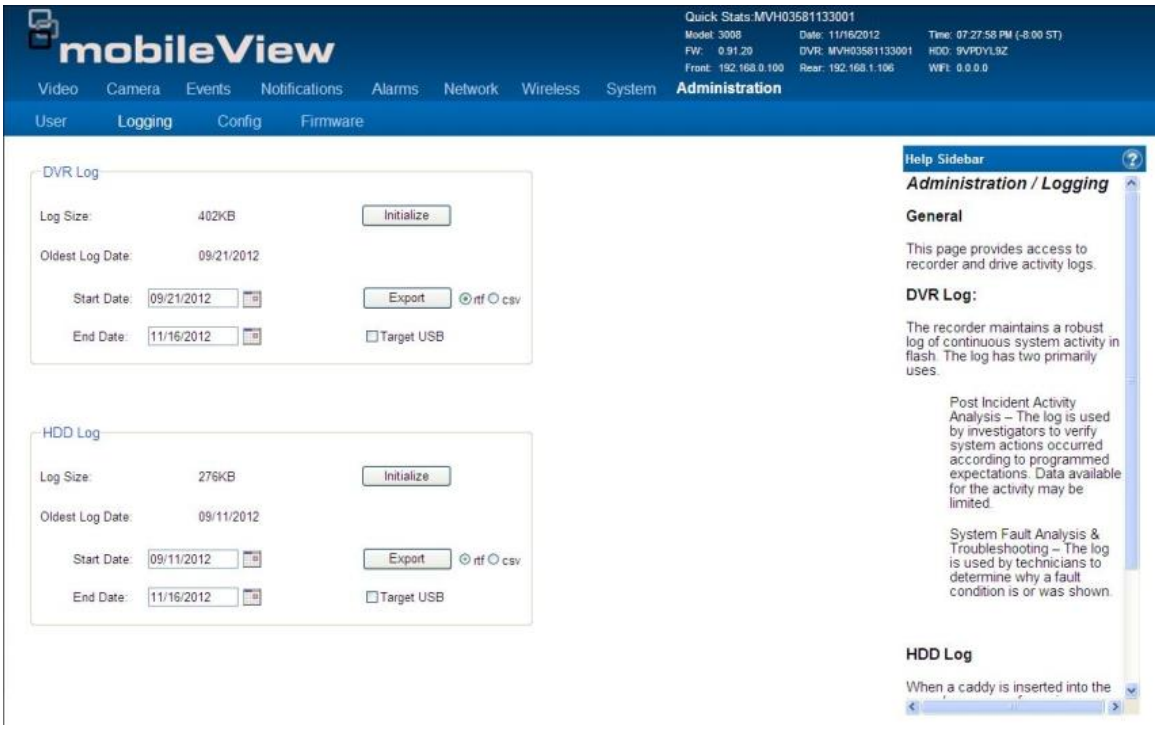

The following options are available on this page:

- DVR Log
- HDD Log

Adminstration/Config

Figure 75: Config page

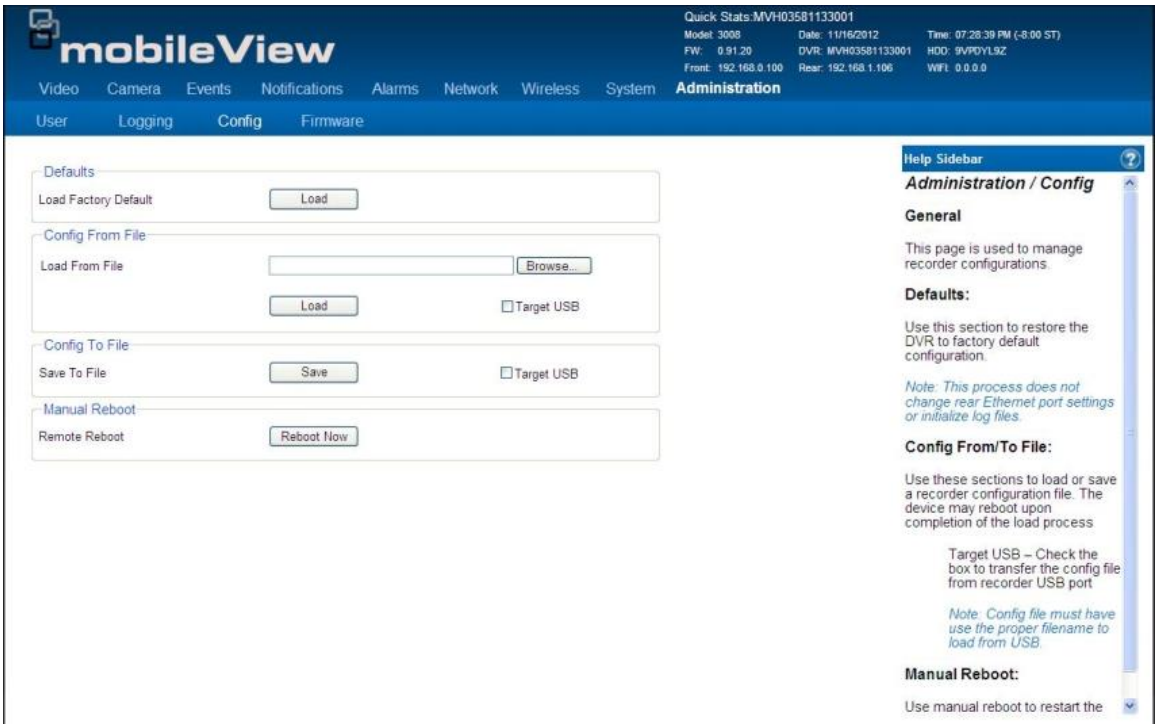

The following options are available on this page:

- Defaults
- Config from File
- Config to File
- Manual Reboot

Adminstration/Firmware

Figure 76: Firmware page

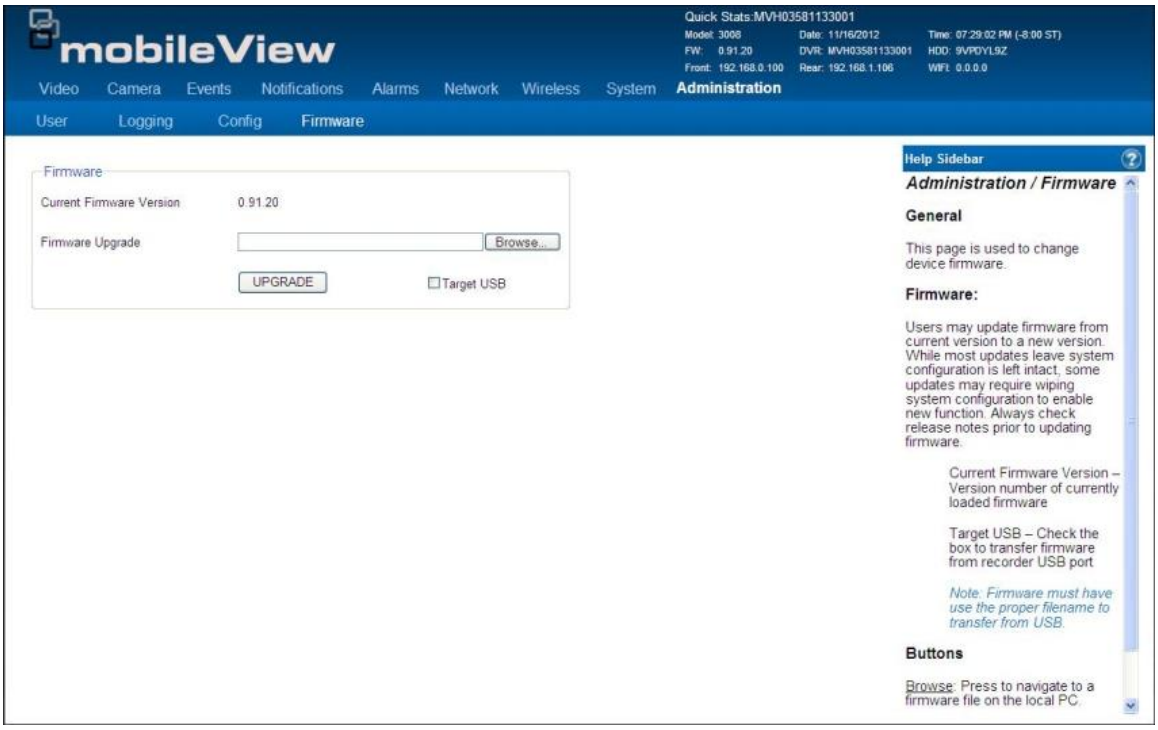

The following options are available on this page:

- Current Firmware
- Load Upgrade File
- Upgrade button

Chapter 5
Optional hardware installation

Summary

This chapter describes how to install optoinal hardware components such as the accelerometer, impact sensor, tag switch, microphone, and GPS unit.

Content

Installing a tag switch

Tag switchs are optional and are typically installed near the driver. There are two models: one with a key reset and one without (Figure 77).

Figure 77: Tag switch

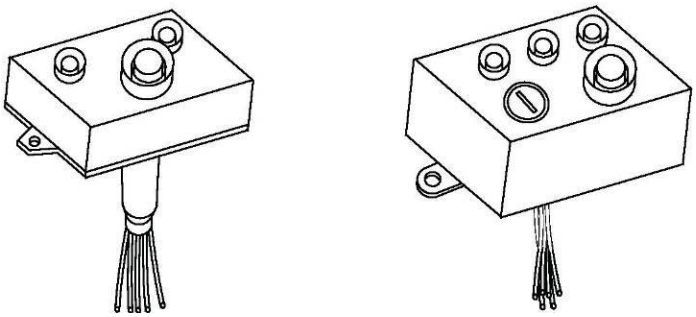

To install a tag switch:

1. Mark the location of the mounting holes, using the tag switch as a template.
2. Drill the mounting holes, using a 3/16 in. (5 mm) drill bit.
3. Drill a hole for the tag switch wiring, using a 3/4 in. (20 mm) drill bit.
4. Splice a six-conductor 18 AWG cable to the tag switch wiring by soldering the wires and applying heat-shrink tubing to the exposed wire.

   Note: The tag switch with key reset has six wires, and the tag switch without key reset has only five. The NC and common wires are both yellow and are interchangeable.
5. Route the cable to the DVR. See Figure 78 on page 87. Connect the cable to the connectors as follows:

   - Connect the yellow NC and common wires to Digital Input 1 (J3, terminal 1) and 12VDC Out (J3, terminal 9).
   - Connect the gray positive wire to 12VDC Out (J3, terminal 9) or any other available 12 V terminal.
   - Connect the green normal wire to Software LED output (J2, terminal 7).
   - Connect the red check wire to Camera LED output (J2, terminal 6).

- Connect the white negative wire (present only on the tag switch with key reset) to Ground (J3, terminal 10).

  Note: Digital Input 2 (J3, terminal 2) is typically reserved for the impact sensor input.

6. Mount the tag switch, using the previously drilled holes.

Figure 78: Tag switch wiring

Status LEDs

The MobileView 3012 provides LEDs for status indication. When the green LED is on and red LED is off, the system is functioning properly. When the red LED is on, it indicates the system needs service.

Installing a microphone

The DVR supports up to two optional microphones. One is typically mounted in the head sign area near the driver, and a second can be mounted toward the rear of the vehicle.

See the instructions provided with the microphones for installation procedures. Route a two-conductor, shielded twisted-pair cable for audio and a twisted-pair power cable (18 AWG wire is recommended) from the microphone device to the DVR location. The shield drain wire is attached at the microphone end only. Leave a service loop at the microphone end.

Figure 79 shows single-channel audio wiring for one microphone. Figure 80 shows dual-channel audio wiring for two microphones.

Figure 79: Single-channel audio wiring

Figure 80: Dual-channel audio wiring

Note: For instructions on making wiring connections at the microphone, see the manufacturer’s instructions.

Chapter 6
Testing

This chapter explains how to test MobileView equipment to make sure the system is operating correctly. You can configure and test the cameras, inputs, and outputs using a laptop computer.

Content

MobileView 3012 testing

MobileView 3012 is preconfigured for 12 cameras at 30 fps per camera, dual-channel audio, and a tag switch on input 1. Configuration tasks require setting numerous variables and parameters to meet customer and installation requirements. When you set and save these tasks, you can test the system.

Watchdog on/off

The system watchdog monitors low-level system communication between system software and hardware. If communication is interrupted for a period of 20 minutes, the watchdog process shuts down and restarts the DVR.

Starting the MobileView 3012 Hardware Monitor program requires stopping low-level communication and therefore automatically turns off the watchdog. Watchdog On and Off buttons control watchdog operation. To indicate the Watchdog is off, the front panel LCD displays a “Wdog OFF” message and both the software and camera status output LEDs blink rapidly. There is no external indication when the watchdog is running.

LEDs and relays

You can test the software LEDs via the MobileView 3012 Hardware Monitor program. Check the appropriate box for the LED to test, and then click send (Figure 81). The LED lights momentarily.

You can also test the relays. Select the relay to activate and click Send (Figure 82 below). Relay activation is generally audible, but no external display indicates relay status.

Figure 81: LED options

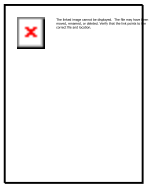

Figure 82: Relay options

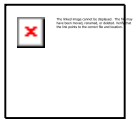

Relay testing

Each relay activates and deactivates in succession when you click the Enable Relay Testing checkbox.

Fan and fuse status

The DVR front status LCD provides a summary of fan and power conditions. The real-time input screen (**Error! Reference source not found. Error! Bookmark not defined.**) shows detailed information about each fan and fuse. A checkmark icon indicates the fan or fuse is working. A warning icon indicates a problem.

Status indicators

The DVR has ten digital inputs. The circle shown on the right side of the real-time input screen (**Error! Reference source not found. Error! Bookmark not defined.**) indicates the status of each input. All inputs use a black circle to indicate the off state. The on state is shown by red and green circles.

In the Alarm events configuration screen, an input on state equates to Activated while input off state equates to Deactivated.

Logging off

Once you complete the review and testing of your DVR's main features, log off from the DVR.

To log off:

1. Close the Real-time inputs screen.
2. Close the MobileView 3012 Hardware Monitor program. The DVS server restarts automatically.
3. Log off the remote desktop session.

Chapter 7
Troubleshooting and support

This chapter provides information to help you troubleshoot problems and shows you how to contact technical support, should you need assistance with your MobileView DVR or MobileView system.

Content

Troubleshooting

The system LCD displays detailed, real-time information about the status of the MobileView DVR. See Table 8 below for details on what each LCD message indicates.

Table 8: System LCD messages

NEED NEW DATA!

Contacting us

For help installing, operating, maintaining, and troubleshooting this product, see this document and any other documentation provided. If you still have questions, contact us during business hours (Monday through Friday, excluding holidays, between 7 a.m. and 3 p.m. Pacific Time).

North America

T: 855-MOB-VIEW (662-8439) Option 2.

Email: MobileViewTS@fs.utc.com

Note: Be ready at the equipment before calling.

Online resources

Here are some useful links on our Web site, www.interlogix.com.

Link	Description
Warranty and terms information	From the Customer Support menu, select Return and Warranty Policy Statement or Terms and Conditions Policy Statement .
Customer service and technical support	From the Customer Support menu, select Customer Service or Technical & Application. Select the appropriate product category for the contact information or use the menu to select a location outside the US.

Appendix A
Checklists and worksheets

Summary

This appendix provides a checklist, a worksheet, and a mounting plate template.

Content

DVR installation checklist

The MobileView DVR has numerous options and variables that need to be addressed during an installation and checked thereafter. The DVR installation checklist on these pages provides a means of recording most system variables in one document.

The installation checklist (Table 9) is provided as a guide. It should be completed by the installation contractor and signed by a property representative. This checklist can be the permanent record of system configuration at the time of installation.

Table 9: Installation checklist

Property name:	Vehicle/fleet number:
Installation date:	Vehicle make/year:
DVR serial number:	DVR software version:

Table 10: DVR commissioning checklist

Item	Good	NA	Comments			
MV event button status LEDs	☐	☐	Good = Green LED only on status tag.			
DVR LCD	☐	—	System Status:	Fuse Status:	Fan Status:	HDD Status:
			I: On S: Run C: Ok	5V: Ok 12V: Ok	Running	Present-locked
Continuous power (~24 VDC protected)	☐	—	Protective device used? (circle one) 10 A CB 10 A fuse			
Ignition power (~24 VDC protected)	☐	—	Protective device used? (circle one) 1 A CB 1 A fuse			
DVR installed properly	☐	—	Mounting plate secure, backbox secure, HDD accessible, sufficient ventilation, backbox accessible.			
J1708 module	☐	☐	+ - 12VDC power wired to Module terminals labeled 12VDC and GND. DB9 cable connect at SERIAL 2 DVR Port. FLTSettings_GE.ini : UseJ1587=Y added under [System Settings] and J1587ComPort=3 under [J1587Settings]			
Camera housings/bezels	☐	—	Secure, evenly tightened, blue LocTite on housing screws, glass clean.			

Item	Good	NA	Comments
Wireless antenna	☐	☐	Connected and sealed.
GPS antenna	☐	☐	Connected and sealed. DVR S/WARE LED 2 Green (sat fix) & COMS LED 4 flashing
Cisco radio	☐	☐	Radio grounded, Antenna cable connected, Ethernet cable connected from PSU ETHERNET Port to DVR GigaBit NET Port. Radio LEDs active. Input power fused with SloBlo fuse at 600mA for 24VDC or 1.7A for 12VDC.
WiMax radio	☐	☐	Antenna cables connected, Ethernet cable connected from radio to DVR GigiBit NET port.
Impact sensor	☐	☐	Installed properly (oriented correctly and mounted to a surface not subject to vibration).
Accelerometer	☐	☐	Installed/calibrated properly (oriented correctly, calibrated using MV4 Monitor tool, mounting surface not subject to vibration).
DVR time zone, time, and date	☐	—	Confirm Time Zone, time and date are correct.
Backbox IP address	☐	☐	Confirm Backbox IP, Subnet, and Gateway if applicable. Refer to Customer provided list if applicable.
Cameras	☐	—	Confirm all cameras installed are functioning, clear images, and save jpg images one for each camera.
Depot and vehicle ID	☐	—	Confirm Depot ID and Vehicle ID are entered correctly per end customer requirements (refer to DVR configuration checklist if completed).
MV event button enabled and tested	☐	☐	Enabled and tested: 1) Use PENTA Monitor to test input functionality, and 2) Push button and confirm event recorded in Log Record.
Impact sensor enabled and tested	☐	☐	Enabled and tested: 1) Use PENTA Monitor to test input functionality, 2) Strike the sensor in the x or y direction and confirm event recorded in Log Record.
Accelerator enabled	☐	☐	DVR input configured and enabled for correct G Force with correct alarm event reaction.
Audio tested	☐	☐	Tested if present.
Deleted archive files and Outgoing folder	☐	—	Delete Archive files from the Archive (E:) partition and delete all files from the Workspace (D:)/Outgoing Folder.
IR illuminator	☐	☐	Installed and aligned properly. Secured.

DVR viewer configuration checklist

Table 11: Property information, DVR and client viewer vehicle settings

Property information	
Property name:	
Vehicle fleet numbers (attach separate list if necessary):	
DVR date and time, workgroup, backbox network settings	
DVR time zone set to:	DVR workgroup (default is GE):
Front panel network IP/subnet (default 192.168.0.100/255.255.255.0):	
GigiBit NET Port IP/subnet (default is DHCP):	
Client viewer vehicle settings (no spaces or special characters)	
Depot ID:	Vehicle ID:

Table 12: Camera settings

Camera	**Capture rate (fps):**	**Picture resolution**	**Vehicle ID:**
Camera 1 Record images? Y N Color? Y N B & W? Y N		(circle one) 320 x 240 640 x 240 D1	Camera name: Description:
Camera 2 Record images? Y N Color? Y N B & W? Y N		(circle one) 320 x 240 640 x 240 D1	Camera name: Description:
Camera 3 Record images? Y N Color? Y N B & W? Y N		(circle one) 320 x 240 640 x 240 D1	Camera name: Description:
Camera 4 Record images? Y N Color? Y N B & W? Y N		(circle one) 320 x 240 640 x 240 D1	Camera name: Description:
Camera 5 Record images? Y N Color? Y N B & W? Y N		(circle one) 320 x 240 640 x 240 D1	Camera name: Description:

Camera	Capture rate (fps):	Picture resolution	Vehicle ID:
Camera 6 Record images? Y N Color? Y N B & W? Y N		(circle one) 320 x 240 640 x 240 D1	Camera name: Description:
Camera 7 Record images? Y N Color? Y N B & W? Y N		(circle one) 320 x 240 640 x 240 D1	Camera name: Description:
Camera 8 Record images? Y N Color? Y N B & W? Y N		(circle one) 320 x 240 640 x 240 D1	Camera name: Description:
Camera 9 Record images? Y N Color? Y N B & W? Y N		(circle one) 320 x 240 640 x 240 D1	Camera name: Description:
Camera 10 Record images? Y N Color? Y N B & W? Y N		(circle one) 320 x 240 640 x 240 D1	Camera name: Description:
Camera 11 Record images? Y N Color? Y N B & W? Y N		(circle one) 320 x 240 640 x 240 D1	Camera name: Description:
Camera 12 Record images? Y N Color? Y N B & W? Y N		(circle one) 320 x 240 640 x 240 D1	Camera name: Description:
Camera 13 Record images? Y N Color? Y N B & W? Y N		(circle one) 320 x 240 640 x 240 D1	Camera name: Description:
Camera 14 Record images? Y N Color? Y N B & W? Y N		(circle one) 320 x 240 640 x 240 D1	Camera name: Description:

Camera	Capture rate (fps):	Picture resolution	Vehicle ID:
Camera 15 Record images? Y N Color? Y N B & W? Y N		(circle one) 320 x 240 640 x 240 D1	Camera name: Description:
Camera 16 Record images? Y N Color? Y N B & W? Y N		(circle one) 320 x 240 640 x 240 D1	Camera name: Description:

Table 13: Audio settings

Client viewer audio settings	
Microphone 1 (circle): None Installed/enabled	Microphone 2 (circle): None Installed/enabled
Location:	Location:

Table 14: Alarm events and system settings

Client viewer alarm events					
Event/input list	Enabled? (circle)	Event activation (check)	Event reaction		
Event input (MV tag switch	Y N	___Activated (closed) ___Deactivated (open) ___VDC input	Create archive ___	Pre (min):	Post (min):
Impact sensor	Y N	___Activated (closed) ___Deactivated (open) ___VDC input	Create archive ___	Pre (min):	Post (min):
	Y N	___Activated (closed) ___Deactivated (open) ___VDC input	Create archive ___	Pre (min):	Post (min):
Accelerometer	Y N	___G-Force X: ____ ___G-Force Y: ____ ___G-Force Z: ____	Create archive ___	Pre (min):	Post (min):

Client viewer alarm events					
	Y N	___Activated (closed) ___Deactivated (open) ___VDC input	Create archive ___	Pre (min):	Post (min):
	Y N	___Activated (closed) ___Deactivated (open) ___VDC input	Create archive ___	Pre (min):	Post (min):
	Y N	___Activated (closed) ___Deactivated (open) ___VDC input	Create archive ___	Pre (min):	Post (min):
Wireless radio power on	Y N	___Activated (closed) ___Deactivated (open) ___VDC input	Create archive ___	Pre (min):	Post (min):

Client viewer system settings		
System settings	Shutdown dwell time (DVR shutdown delay minutes):	
Camera settings	Number of cameras installed:	Camera shutdown dwell time (min):

Customer/contractor acceptance		
Customer signature:		Print name and date:
Installer signature:		Print name and date:

Vehicle layout

On the layout diagram shown in Figure 83 on page 104, indicate the types and locations of all cameras to be installed. Use the following abbreviations:

- FL: Flush mount
- RC: Recessed

- FF: Variable focus forward-facing

Figure 83: Vehicle layout

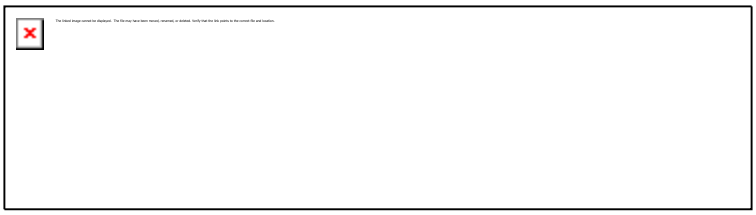

Vehicle length (ft.) _____

Articulated (circle one): Yes or No

Camera legend:

- FL camera #: _____
- RC camera #: _____
- FF camera #: _____

Notes:

Appendix B
Templates and dimensions

Summary

This appendix provides templates and dimensions to help you install the MobileView 3012 system.

Camera mounting plate template

Use this mounting template to drill the holes for the mounting plate in the correct places.

Figure 84: Mounting plate template

DVR base plate

Use this mounting template to drill the holes for the mounting plate in the correct places.

Figure 85: DVR base plate 1

Figure 86: DVR base plate 2

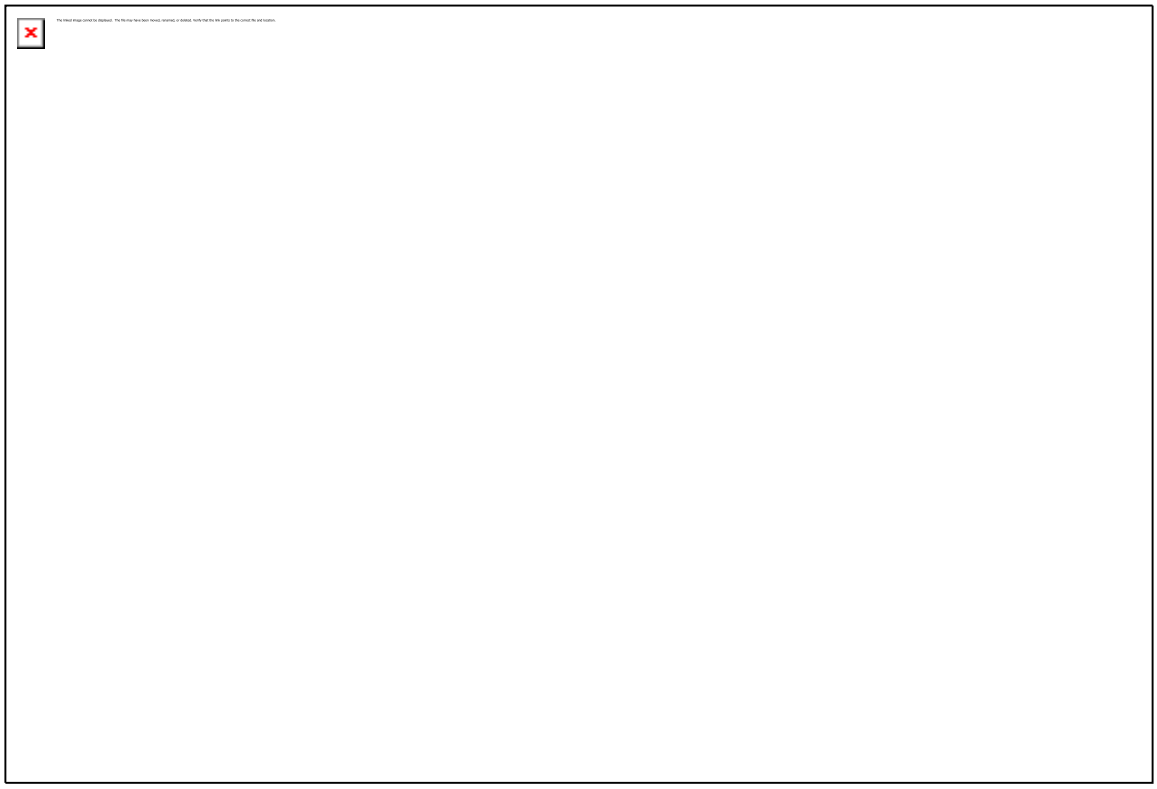

DVR assembly dimensions

Figure 87 below provides the DVR assembly dimensions.

Figure 87: DVR assembly dimensions

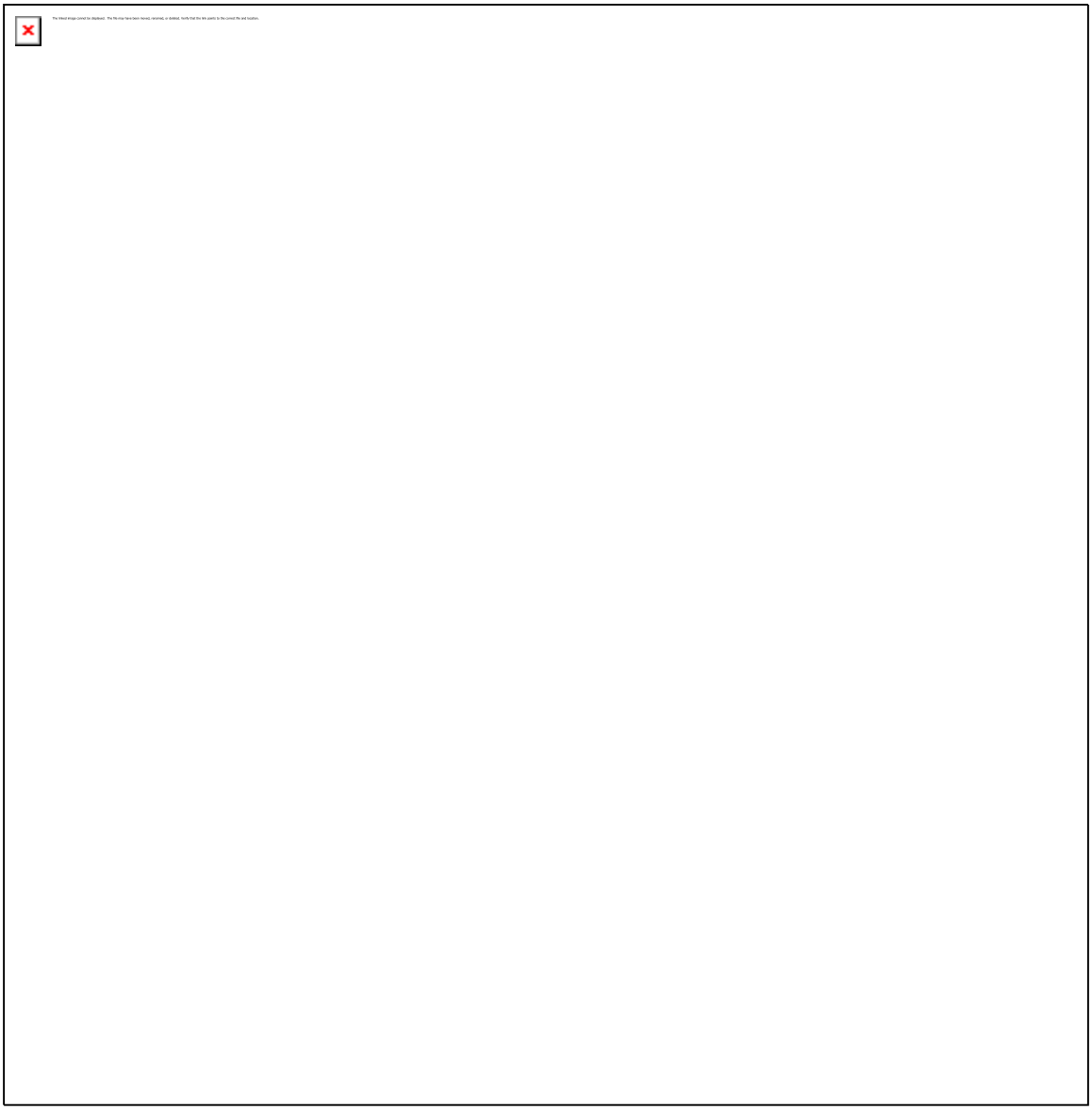

Index

M

O

P

R

S

T

V

W